PowerMIG Series

GeKaMac®

Power MIG
GS WB 400 L

Users Manual

Please Read and Understand This Manual
Before Operating The Welding Machine

www.gedikwelding.com

Forward

Thank you for your purchase of Gedik Welding's power source.

This Owner's Manual (hereafter referred to as "this manual") explains the following points for safe use of the product.

- Caution regarding the product
- Welding operation / setting method
- Daily maintenance (cleaning, inspection)
- Troubleshooting

Store this manual in a safe place so that it can be referred whenever necessary.

AT UYGUNLUK BEYANI

EU DECLARATION OF CONFORMITY

Bu uygunluk beyanı yalnızca imalatçının sorumluluğu altında düzenlenir.

This declaration of conformity is issued under the sole responsibility of the manufacturer.

İstanbul, Turkey, 08.03.2024

İmalatçı / Manufacturer

GEDİK KAYNAK SANAYİ ve TİCARET A.Ş.

Ankara Cad. No.306 Seyhli Pendik ISTANBUL TURKIYE

Ürün / Product	ARC WELDING MACHINE
Marka-Model / Brand- Model	POWER MIG GS WB 400L

Yukarıda tanımlanan beyanın nesnesi ilgili uyumlaştırılmış AB mevzuatı ile uyumludur.

The object of the declaration described above, is in conformity with the relevant union harmonisation legislation.

Direktifler / Directives	2014/30/EU & 2014/35/EU & 2009/125/EC EU/2019/1784

Uyumlaştırılmış standartlar ve uygunluğun deklare edilmesiyle ilişkili diğer referanslar.

References to the relevant harmonised standarts used and references to the other technical specifications in relation to which conformity is declared.

Standartlar / Standards	EN IEC 60974-1 EN IEC 60974-10

Bu ekipman, talimatlara uygun kurulduğunda, bakımı yapıldığında ve kullanıldığında belirtilen standartlara uygundur. Makine üzerinde bir değişiklik yapıldığında veya yanlış kullanımda deklarasyon geçersiz olur.

The equipment is in compliance with pertinent legislation when installed, utilized, and maintained in accordance with the enclosed instructions. This declaration will be invalid under any modification or improper use.

İmalatçı Adına İmzalayan / Signed for and on behalf of:

Hatice Özel, Equipment Business Unit Director

Important Information

Use of the Product

This product is a power supply unit designed and manufactured for use in arc welding.

Do not use the product for any other purposes.

Safe Use of the Product

For safe use of the product (hereafter referred to as welding power source), ensure to follow the instructions below:

- This manual is intended for workers who are familiar with the listed terminologies. If this product is going to be operated or serviced by workers who are not familiar with the terminology, the responsibility falls on the customer to provide thorough training on operation and safety.
- This equipment and this manual are for use only by persons trained and experienced in the safety operation of welding equipment. Untrained persons must complete the "Special workshop for arc welding".
- For protection from possible injury or damage in the equipment, be sure to read and follow the safety information in this manual. Do not use it for purposes not indicated in the manual.
- Make sure that installation /operation/maintenance of the welding power source and welding machine is performed by qualified personnel with sufficient knowledge and skills.
- If this manual is lost or damaged, immediately contact your dealer.

Copyright

This manual is copyrighted, and all rights are reserved by Gedik Welding. Any part of the manual shall not be copied, photocopied, or reproduced without the prior consent of Gedik Welding.

When Exporting the Product

The following conditions are to be observed and met when exporting the product outside of the country.

- The product is designed and manufactured according to the Japanese laws/specification and industrial standards. The product may not conform to laws / specification and standards in other countries.
- When shipping or reselling the product outside of the country, make sure to contact your dealer in advance.

Disposal of the Product

For disposal of welding equipment including the welding power source and welding material, confirm the regulation of the country / region in which the equipment is located and follow the rules. When disposing, arrange consignment contract for waste disposal with an authorized waste collectors and manage the disposal processes.

Service and Support

See the back cover for contact numbers and mailing addresses. When contacting your dealer for service, you are required to provide the following information:

- Name, address, telephone number
- Product model, manufacture year, serial number, and software version number
  (Refer to the diagram below for product information. Attachment location and content of nameplate may vary depending on the purchased product.)

<Example> Attachment location of the nameplate

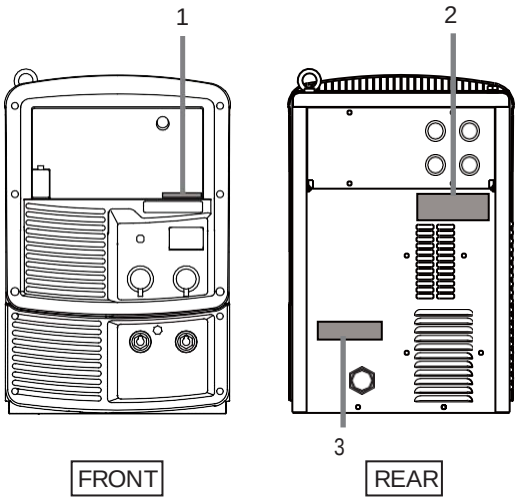

No.	Serial No.
1	• (Same number as the nameplate in the rear) #X#####X ###########
2	• Product model XX XX X###X • Manufacture year #### year • Serial number #X#####X ###########
3	• Software version number X##### Ver ###. ###.###.###

TABLE OF CONTENTS

Forward i
Important Information ii
Use of the Product ii
Safe Use of the Product ii
Copyright ii
When Exporting the Product ii
Disposal of the Product ii
Service and Support iii

CHAPTER 1 SAFETY INFORMATION

1.1 Warning Symbols 1-1
1.2 Safety Precaution 1-1
1.2.1 Operating precautions 1-2
1.2.2 Precautions for power supply and electric shock 1-3
1.2.3 Precautions for air discharge and use of respiratory protective equipment 1-4
1.2.4 Precautions for flammable materials 1-5
1.2.5 Precautions for gas cylinder and gas regulator 1-6
1.2.6 Precautions for handling of plastic parts 1-6
1.2.7 Precautions for disassembling and modifying the welding power source 1-7
1.2.8 Precaution for protective equipment 1-7
1.2.9 Precautions for rotating part 1-7
1.3 Principal Safety Standards 1-8

CHAPTER 2 PRODUCT SPECIFICATION AND CONFIGURATION

2.1 Specification 2-1
2.1.1 Specifications 2-1
2.1.2 Applicable welding method 2-2
2.1.3 External dimensions 2-3
2.1.4 Rated duty cycle 2-3
2.2 Product Configuration 2-4
2.2.1 Standard composition 2-4
2.2.2 Accessory (supplied) 2-7
2.2.3 Accessory (not supplied) 2-7
2.2.4 Optional accessories 2-8
2.3 Part Names 2-10
2.3.1 Front panel 2-10
2.3.2 Rear panel 2-10

CHAPTER 3 TRANSPORTATION AND INSTALLATION

3.1 Required Equipment 3-1
3.1.1 Welding power source equipment 3-1
3.1.2 Ventilation equipment/partial exhaust facility 3-2
3.2 Installation Environment 3-3
3.2.1 Installation environment 3-3
3.2.2 Electromagnetic interference 3-3
3.3 Transportation Procedure 3-5
3.3.1 Transportation with lifting lug 3-6

CHAPTER 4 CONNECTION

4.1 Precautions for Connection Procedure and Grounding 4-1
4.2 Connecting the Welding Power Source 4-2
4.2.1 Connection of cable at output side 4-3
4.2.2 Connection of wire feeder 4-4
4.2.3 Connection of welding torch 4-5
4.2.4 Connection of voltage detection cable (Voltage detection cable is used) 4-6
4.2.5 Connection at TIG welding 4-8
4.2.6 Connection at DC STICK welding 4-9
4.2.7 Connection of shielding gas 4-10
4.3 Grounding and Connection of Input Power Supply 4-11
4.4 Confirmation of Connection 4-12
4.5 Connection of External Equipment 4-12
4.5.1 Connection of robot 4-12
4.5.2 Connection of automatic machine 4-15
4.6 Wiring of Voltage Detection Cable at Base Metal Side 4-18
4.6.1 Wiring to wire feeder 4-18
4.6.2 Wiring to welding power source 4-19
4.6.3 Wiring example of voltage detection cable 4-20

CHAPTER 5 WELDING OPERATION

5.1 Precaution at Welding Operation 5-1
5.1.1 Precautions for air discharge and use of respiratory protective equipment 5-1
5.1.2 Precaution for protective equipment 5-2
5.1.3 Precautions on welding place 5-2
5.2 Check before Welding 5-2
5.3 Power ON and Gas Supply 5-4
5.4 Wire Inching 5-5
5.5 Check and Setting of Welding Condition 5-6
5.5.1 Reading welding condition 5-6
5.5.2 Preventing erroneous operation on operation panel 5-6
5.6 Performing Welding Operation 5-7
5.6.1 Operation of welding start 5-7
5.6.2 Operation during welding 5-8
5.6.3 Operation at welding end 5-10

CHAPTER 6 WELDING CONDITION

6.1 List of Welding Conditions 6-1
6.1.1 Parameter (Welding parameter) 6-1
6.1.2 Function 6-1
6.1.3 Internal function 6-2
6.2 Function on Operation Panel 6-6
6.3 Welding Conditions 6-8
6.3.1 Basic welding conditions 6-8
6.3.2 Useful functions 6-8
6.4 Preparing Welding Conditions 6-9

6.5 Memory Function of Welding Conditions 6-9
6.5.1 Memory registration of welding conditions 6-10
6.5.2 Read out of welding conditions 6-11
6.5.3 Deletion of memory registration 6-12
6.6 Setting Welding Conditions 6-13
6.6.1 Welding mode setting 6-13
6.6.2 Setting welding parameter 6-15
6.6.3 Crater setting 6-17
6.6.4 Arc spot time.....6-22
6.6.5 Welding voltage adjustment 6-22
6.6.6 Arc characteristics adjustment 6-23
6.6.7 Penetration control adjustment 6-23
6.7 Setting Internal Functions..... 6-24
6.7.1 Setting procedure 6-24
6.7.2 Detailed information on internal functions 6-25
6.8 Operation of Analog Remote Control (Optional) 6-46

CHAPTER 7 ADMINISTRATOR FUNCTIONS

7.1 Protection of Welding Conditions 7-1
7.1.1 Setting/Changing password 7-1
7.1.2 Disabling erroneous operation prevention 7-3
7.2 Welding Result Control Function 7-4
7.2.1 Setting welding result control function.....7-4
7.2.2 Details of welding control items.....7-5
7.4 Initializing Welding Conditions and Internal Functions 7-17
7.5 Checking Software Version..... 7-18

CHAPTER 8 MAINTENANCE AND INSPECTION

8.1 Precautions for Maintenance and Inspection 8-1
8.2 Daily Inspection 8-3
8.3 Periodical Inspection 8-4
8.4 Periodical Replacement Parts..... 8-5
8.5 Insulation Resistance Measurement and Withstand Voltage Test..... 8-5

CHAPTER 9 TROUBLESHOOTING

9.1 Action in Case of Error 9-1
9.2 Troubleshooting..... 9-4

CHAPTER 10REFERENCE MATERIALS

10.1 Parts List..... 10-1
10.2 Reference Drawing..... 10-3
10.2.1 Schematic diagram.....10-4
10.2.2 Parts layout drawing 10-6
10.3 Materials for Setting Welding Conditions..... 10-7
10.3.1 Guide for changing welding conditions.....10-7
10.3.2 Samples of welding condition settings.....10-7

Chapter 1 Safety Information

This chapter explains the precautions on the welding power source and welding operation.

1.1 Warning Symbols

The following safety warning symbols and signs are used throughout the manual to ensure proper operation of the product and to prevent from various hazards that cause serious injury and damages. Indication and explanation for the symbols are as follows:
Make sure to fully understand the content before beginning operation.

The below symbols are categorized by the degree of possible hazard and damage.

Symbols	Explanation
⚠ WARNING	Gives information regarding possible personal injury or loss of life if the product is used improperly.
⚠ CAUTION	Refers to minor personal injury or possible equipment damage if the product is used improperly.

The below symbols are categorized according to the content to be followed.

Symbols	Explanation
❗	Instruction: indicates "Instruction" matters to be followed.
⃠	Prohibited: indicates "Prohibited" matters.

1.2 Safety Precaution

This section explains the safety precautions regarding operation of the welding power source.

1.2.1 Operating precautions

To prevent serious injury or accidents, ensure to follow the instructions below:

⚠ WARNING

- Be sure to read and understand the information in the manual before operating the product. Have only trained and experienced personnel perform operation of welding power source or welding power source.
- Perform construction work on primary power source in the facility, selection of installation space, operation/storage/piping of high-pressure gas, storage of welded products, and disposal of waste in accordance with local law and/or regulation at the customer's facility.
- Be sure to take appropriate measures during welding so that no person is allowed unauthorized access near the welding power source or work areas.
- Only authorized personnel or person with full understanding and experience of the welding power source must perform installation, maintenance and repair of welding power source.
- Make sure to attach a safety belt when working at high locations.
- For those with pacemaker, avoid being close to the machine during operation or work area until obtaining physician's approval. Machine at operation will generate magnetic field nearby that may cause influence upon the working of pacemaker.
- Do not use the welding power source for purpose other than welding such as thawing a frozen pipe.
- Do not use the welding power source when the case and the cover are removed.
- Removing the cases for maintenance, inspection and repair should be performed by qualified persons or persons familiar with the welding power source. Also put up a barrier around the welding power source or take other necessary measure to prevent other people from getting in the nearby area.

1.2.2 Precautions for power supply and electric shock

To prevent electric shock or burn injury, ensure to follow the instructions below:

⚠ WARNING

- Do not touch the input and output terminals and the internal live electrical parts of the welding power source.
- Have a qualified electrical engineer ground the case of the welding power source and base metal or jig electrically connected in accordance with local regulation.
- Before starting maintenance and inspection, make sure to cut the input power with the disconnect switch in the box connected with the welding power source and wait three minutes or more.
  The capacitors may be still charged even after the input power is cut. Make sure that there is no charged voltage before starting the work.
- Wear dry insulating gloves for protection. Do not use damaged or wet gloves.
- Tighten all cable connections and insulate them.
- Do not wrap cables around the body.
- Perform periodical maintenance and repair damaged parts if any before use.
- Turn off POWER switch of all the related equipment when not in use.
- Periodically blow the parts of welding power source with dry compressed air to remove dust.
  Powder dust accumulating inside may cause insulation deterioration, resulting in electric shock or fire.
- Do not use a cable with insufficient capacity, serious damage or cable without grounding.

⚠ CAUTION

- When the power switch is tripped, never turn it on again and contact your dealer.

1.2.3 Precautions for air discharge and use of respiratory protective equipment

To prevent suffocation or gas poisoning in the welding operation, ensure to follow the instructions below:

⚠ WARNING

- When welding is required in tank, boiler, reaction tower, or hold of a ship, closed space, or any other places of poor ventilation, ensure to provide ventilation equipment.
- Gas of larger gravity than that of oxygen, such as carbon dioxide gas or argon gas, retains at the bottom part.
  To prevent anoxia due to the retention gas, provide ventilation equipment.
- When it is difficult to provide ventilation equipment or the ventilation equipment does not give sufficient performance, ensure to use respiratory protective equipment.
  For preventive measure from falling due to anoxia, apply lifelines such as a safety belt.
- For the welding operation in a narrow space, perform the operation with the trained supervisor.
- Periodically inspect the ventilation equipment to ensure correct and proper performance of ventilation.

To prevent any health damage due to poisonous gas or particle substances (fume) emitted in the welding operation, ensure to follow the instructions below:

⚠ WARNING

- To reduce the dust concentration, install a partial exhaust facility such as fume suction device, or install the collective ventilation equipment.
- When it is difficult to provide a partial exhaust facility or the ventilation or exhaust facility does not give sufficient performance, ensure to use the respiratory protective equipment.
- In performing welding or cutting the coating steel plate or galvanized steel sheet, provide a partial exhaust facility or let the welding operator as well as the surrounding operators use respiratory protective equipment. (Welding or cutting the coating steel plate or galvanized steel sheet will cause toxic gas or fume.)
- Do not perform welding operation in the vicinity of degreasing, cleansing, or spraying operation. Performing the welding operation in such places may generate poisonous gas.

1.2.4 Precautions for flammable materials

To prevent fire, explosion, and rupture, ensure to follow the instructions below:

⚠ WARNING

- Remove all flammables within 10 m (33 ft) of the welding arc so that sparks and spatter do not strike flammable materials. If this is not possible, tightly cover them with noncombustible covers.
- When welding on a ceiling, floor, bulkhead, or partition, remove all flammable materials in hidden places.
- Tighten all cable connections and insulate them.
  Loose connection in the cable and current path of the base metal such as steel frame may cause electric shocks and fire hazards from energization.
- Connect power cable for base metal as close to the welding area as possible.
- Do not weld on gas pipe and closed containers such as tanks or drums.
- Performing arc welding on flammable object such as fuel tank may cause explosion. Furthermore, welding on closed container such as tanks and pipes may cause burst.
- Watch for fire and keep a fire extinguisher near the welding area.
- Periodically blow the parts of welding power source with dry compressed air to remove dust.
  Powder dust accumulating inside may cause insulation deterioration, resulting in electric shock or fire.
- Do not place hot base metal after welding near flammable materials.
  Spatter and hot base metal after welding can cause fire.
- Do not place the welding power source near combustible materials or flammable gas.
- Do not place the welding torch near the wire feeder or the frame of wire reel stand.
- When there is an electrical connection between a workpiece and the frame of wire feeder or the wire reel stand, arc may be generated and cause damage by a fire if the wire contacts the frame or the workpiece.

1.2.5 Precautions for gas cylinder and gas regulator

To prevent falling of gas cylinder, gas regulator explosion and accident caused by gas, ensure to follow the instructions below:

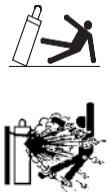

⚠ WARNING

- Use only correct shielding gas cylinders according to the related laws, regulations and customer's standard.
  Gas cylinder contains compressed gas. Wrong operation may cause gas explosion, resulting in serious physical injury.
- Read and follow instructions on compressed gas cylinders, associated equipment, and the CGA publication P-1 listed in PRINCIPAL SAFETY STANDARDS.
- Keep the cylinder upright and securely chained to a stationary support or a rack.
  Falling or tipping of cylinder may cause serious injury.
  In opening the valve of gas cylinder, keep your face away from the gas discharge port.
- Keep protective cap in place over valve except when gas cylinder is in use or connected for use.
- Do not place the gas cylinder under high temperature.
- Protect compressed gas cylinders from excessive heat, mechanical shock, and arcs.
- Do not set welding torch to the cylinder or touch the cylinder with welding electrode.
- For the gas regulator, make sure to use a device for compressed gas cylinder that conforms to the specific application of the shielding gas.
  Using an inappropriate gas regulator may cause explosion.

1.2.6 Precautions for handling of plastic parts

Front and rear panel of the welding power source is made from polycarbonate resin. To prevent from electric shock or fire caused by the damage on polycarbonate resin, ensure to follow the instructions below.

⚠ WARNING

- Do not apply external force or shock to the front and rear panels.
  Otherwise, damage and malfunction may occur.
- If there is dirt on plastic parts, soak a soft cloth in water, alcohol or neutral detergent, wring it well and wipe off the dirt.
  Do not use organic detergent or chemical agent. Doing so may cause crack (breaking) and degrade the strength.
- If there is any abnormality in the plastic parts such as front and rear panels, immediately stop the use and contact your dealer.
- Do not use the welding power source at location in which organic solvent, chemicals, cutting oil and composition oil adhere or atmosphere containing the above.
  Doing so may cause crack (breaking) and deterioration in the plastic part.

1.2.7 Precautions for disassembling and modifying the welding power source

To prevent electrical shock, fire, injury from malfunction and error in the welding power source, ensure to follow the instructions below:

⚠ WARNING

- Do not disassemble/modify the welding power source.
  Disassembling/modifying by customer is out of the warranty scope.

1.2.8 Precaution for protective equipment

For protection from arc ray generated from welding, spattering dross and hearing disorder from noise, observe the following:

⚠ WARNING

- When welding or watching a welder work, wear face shield with a proper shade of filter (See ANSI Z 49.1 listed in PRINCIPAL SAFETY STANDARDS) to protect the face and eyes.
- Wear safety goggles in the work area and the surrounding.
  Ignoring the above may cause injury in the eye or burn from spatter and spattering dross.
- Wear protective equipment such as protective leather gloves, long-sleeve clothes, leg covers, and leather apron.
  Ignoring the above may cause electrical shock and burn.
- Install protective screens or barriers to protect the eyes of others in the work area from arc ray.
- Wear an ear protector when noise level is high.
  Ignoring the above may cause hearing disorder.

1.2.9 Precautions for rotating part

To prevent being caught / pinched by the rotating parts, ensure to follow the instructions below:

⚠ WARNING

- Keep your hands, fingers, hairs and clothes away from the rotating cooling fan, open parts around the cooling fan and feed roll of the wire feeder.

1.3 Principal Safety Standards

Arc welding equipment – Installation and use, Technical Specification
IEC 62081, from International Electro technical Commission

Arc welding equipment Part 1: Welding power sources IEC 60974-1, from International Electro technical Commission

Arc welding equipment Part 10: Electromagnetic compatibility (EMC) requirements IEC 60974-10, from International Electro technical Commission

⚠ WARNING

- **The class A equipment is not intended for use in residential locations where the electrical power is provided by the public low-voltage supply system. There may be potential difficulties in ensuring electromagnetic compatibility in those locations, due to conducted as well as radiated disturbances.**
- **This equipment does not comply with IEC 61000-3-12. If it is connected to a public low voltage system, it is the responsibility of the installer or user of the equipment to ensure, by consultation with the distribution network operator, if necessary, that the equipment may be connected.**

Safety in Welding and Cutting, ANSI Standard Z49.1, from American Welding Society.
Safety and Health Standards, OSHA 29 CFR 1910, from Superintendent of Documents, U.S. Government Printing Office.

Recommended Practices for Plasma Arc Cutting, American Welding Society Standard AWS C5.2, from American Welding Society.

Recommended Safe Practices for the Preparation for Welding and Cutting of Containers That Have Held Hazardous Substances, American Welding Society Standard AWS F4.1, from American Welding Society.

National Electrical Code, NFPA Standard 70, from National Fire Protection Association. Safe Handling of Compressed Gases in Cylinders, CGA Pamphlet P-1, from Compressed Gas Association.

Code for Safety in Welding and Cutting, CSA Standard W117.2, from Canadian Standards Association, Standards Sales.

Safe Practices For Occupation And Educational Eye And Face Protection, ANSI Standard Z87.1, from American National Standards Institute.

Cutting And Welding Processes, NFPA Standard 51B, from National Fire Protection Association.

NOTE

- **The codes listed above may be improved or eliminated. Always refer to the updated codes.**

Chapter 2 Product Specification and Configuration

This chapter explains the specification, name of each parts and configuration of the welding power source.

2.1 Specification

This section explains the specification and external dimension of the welding power source.

2.1.1 Specifications

This section explains the specification of the welding power source.

Specification/Model	Power MIG GS WB 400 L
Model	Power MIG GS WB 400 L
Number of phase	Three phase
Rated frequency	50/60 Hz
Rated input voltage	400 V
Input voltage range	400 V ± 15 %
Rated input	18.2 kVA, 16.2 kW
Rated input current	26.9 A
Rated output current	400 A
Rated load voltage	34 V
Rated output current range	30 to 400 A
Rated output voltage range	12 to 34 V
Maximum no-load voltage	70 V
Rated duty cycle	50 %
Number of welding condition	100
Operating temperature range	-10 to 40 ℃
Operating humidity range	up to 50% at 40 ℃, up to 90% at 20 ℃
Storage temperature range	-20 to 55 ℃
Storage humidity range	up to 50% at 40 ℃, up to 90% at 20 ℃
External dimensions (W×D×H)	395 mm × 710 mm × 592 mm (w/o eyebolt)
Mass	62 kg
Static characterisitic	Constant voltage characteristic

2.1.2 Applicable welding method

This section explains the applicable welding method (shield gas /wire type /welding type) and wire diameter.

Standard specification

WELDING METHOD	GAS (*1)	WIRE MATERIALS	WIRE DIA. (mm)	TRAVEL SPEED	Penetration adjustment
DC	CO_2	G3Si1	0.8/1.0/ 1.2	(*2) (*3)	Enable
		G3Si1 (Fill)	1.2	STANDARD (*3)	Enable
		CrNi (Fill)	1.2	STANDARD (*3)	Enable
	MAG (20 % CO_2) (*1-1)	G3Si1	0.8/1.0/1.2	(*2) (*3)	Enable
		G3Si1 (Fill)	1.2	STANDARD (*3)	Enable
		CrNi (Fill)	1.2	STANDARD (*3)	Enable
	MAG (10 % CO_2) (*1-2)	G3Si1	0.8/1.0/ 1.2	(*2) (*3)	Enable
	MIG (2 % O_2) (*1-3)	CrNi	0.8/1.0/1.2	(*2) (*3)	Enable
		CrNi (Ferr)	0.8/1.0/1.2	(*2) (*3)	Enable
	MIG (2.5 % CO_2) (*1-4)	CrNi	0.8/1.0/1.2	(*2) (*3)	Enable
		CrNi (Ferr)	0.8/1.0/1.2	(*2) (*3)	Enable
	MIG (100 % Ar) (*1-5)	Al/99	1.2/1.6	(*2) (*3)	-
		Al/Mg	1.0/1.2/1.6	(*2) (*3)	-
		Cu Si	0.8/1.0/1.2	(*2) (*3)	-
		Cu Al	0.8/1.0/1.2	(*2) (*3)	-
DC LOW SPATTER (*4)	CO_2	G3Si1	0.8/1.0/1.2	STANDARD	-
	MAG (20 % CO_2) (*1-1)	G3Si1	0.8/1.0/1.2	STANDARD	-
	MAG (10 % CO_2) (*1-2)	G3Si1	0.8/1.0/1.2	STANDARD	-
	MIG (2 % O_2) (*1-3)	CrNi	0.8/1.0/1.2	STANDARD	-
		CrNi (Ferr)	0.8/1.0/1.2	STANDARD	-
	MIG (2.5 % CO_2) (*1-4)	CrNi	0.8/1.0/1.2	STANDARD	-
		CrNi (Ferr)	0.8/1.0/1.2	STANDARD	-

*1: Note that the "collective" voltage adjustment may not meet the appropriate condition if a mixing gas other than those with the following mixing ratios is used.

*1-1: MAG gas: Argon (Ar) 80 % + Carbon dioxide (CO_2)20 %

*1-2: MAG gas: Argon (Ar) 90 % + Carbon dioxide (CO_2)10 %

*1-3: MIG gas (stainless steel): Argon (Ar) 98 % + Oxygen (O_2)2 %

*1-4: MIG gas: Argon (Ar)97.5 % + Carbon oxygen (CO_2)2.5 %

*1-5: MIG gas (Aluminum/Aluminum bronze/Silicon bronze): Argon (Ar)100 %

*2: Available for applications either of "STANDARD" or "HIGH".

*3: For "STANDARD" mode, the standard mode or extended cable mode (extended mode of power cable) is available. (☞ 6.7.2.1 F1: Standard/Extended cable mode)

*4: In the welding of DC low spattering, the following devices are necessary for wire feeder and welding torch. For details, refer to the instruction manual of each device.

- Wire feeder: CMV-7402
- Welding torch: WT3500V-SD or WT3510V-SD

2.1.3 External dimensions

This section explains the external dimensions of the welding power source.

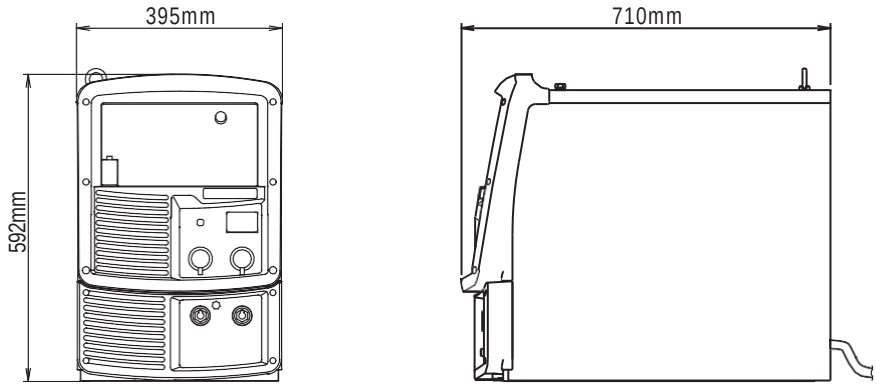

2.1.4 Rated duty cycle

This section explains the rated duty cycle of the welding power source.

⚠ CAUTION

- **Use this welding power source at or under the rated duty cycle.**
  Exceeding the rated duty cycle may result in deterioration and damage to the welding power source.
- **Periodically blow moisture-free compressed air to clean dust and dirt accumulated on the transistor and radiation fin of the diode.**
  If dust and dirt accumulate on the radiation fin, it may not only reduce the duty cycle but also result in degradation or burnout of the welding power source.

- Rated duty cycle of this welding power source is 50% at the output of 400A/34V.
  (Rated duty cycle of 50% means the power source must be rested for 5 minutes after 5 minutes of continuous welding at the rated current.)

<Operation cycle at duty cycle of 50 %>

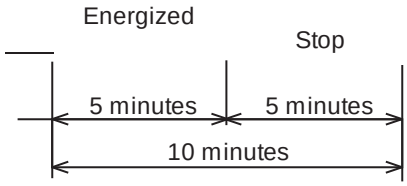

- Use the welding power source within its usable range by observing the duty cycle for the welding current.
- Use the welding power source within the lowest rated duty cycle of combined accessories such as welding torches.

<Relationship between welding current and duty cycle>

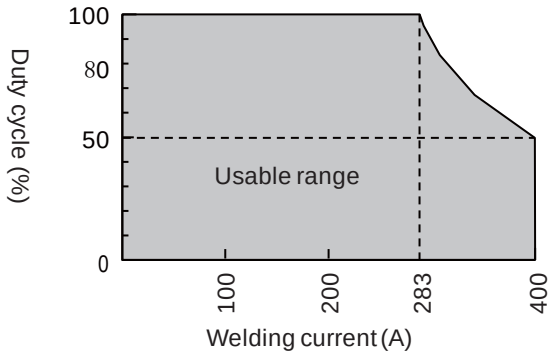

2.2 Product Configuration

This section explains the standard or optional composition of the welding power source and parts to be prepared by customers.

2.2.1 Standard composition

This section explains the standard composition of the welding power source.
For equipment used in combination with the welding power source connected to robot, refer to the instruction manual of the robot controller.

⚠ CAUTION

- **Use this welding power source in combination with the specified wire feeder. Connecting to any equipment other than specified may cause failure of the welding power source.**

- When air-cooled welding torch is used

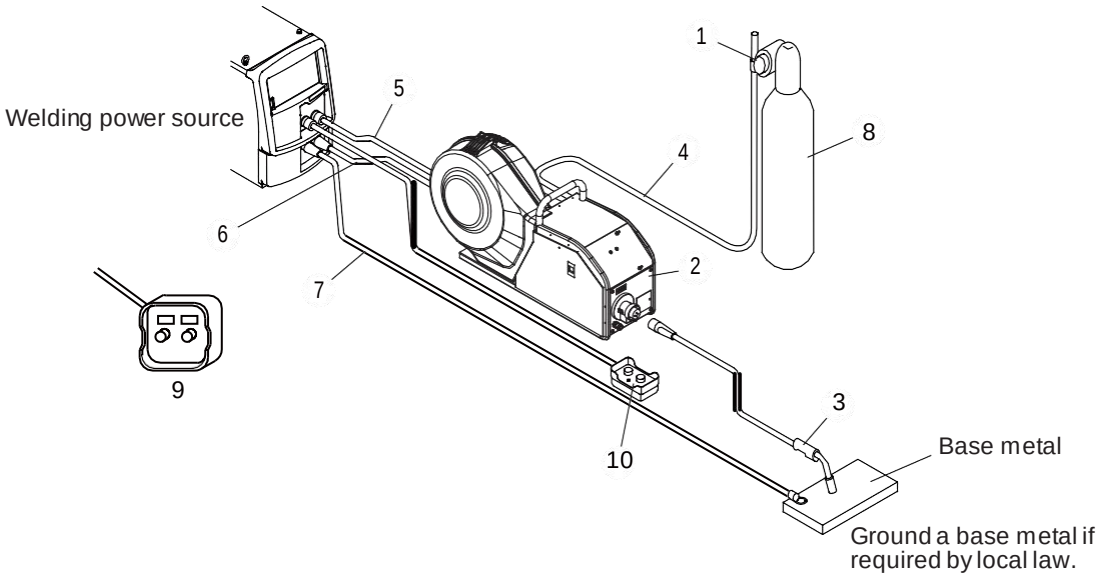

No.	Name	Supplied unit (*1)	Optional accessories	Remarks
1	Gas regulator			To be prepared by the customer. (☞ 2.2.3 Accessory (not supplied))
2	Wire feeder	○		
3	Welding torch	○		
4	Gas hose (3 m)	○		(*2)
5	Control cable for wire feeder (1.5 m)	○		(*2)
6	Power cable for torch side (2 m)	○		(*2)
7	Power cable for base metal side (2 m)	○		(*2)
8	Shielding gas			To be prepared by the customer. (☞ 2.2.3 Accessory (not supplied))
9	Digital remote control (optional)		○	(☞ 2.2.4 Optional accessories)
10	Analog remote control (3 m) (optional)		○	(*2)

*1: Standard component with welding power source. (Supplied when placing order for the welding power source)

*2: Optional extension cable and hose (5 m/10 m/15 m/20 m) are also available. (☞ 2.2.4 Optional accessories)

- When air-cooled welding torch (with voltage detection) is used

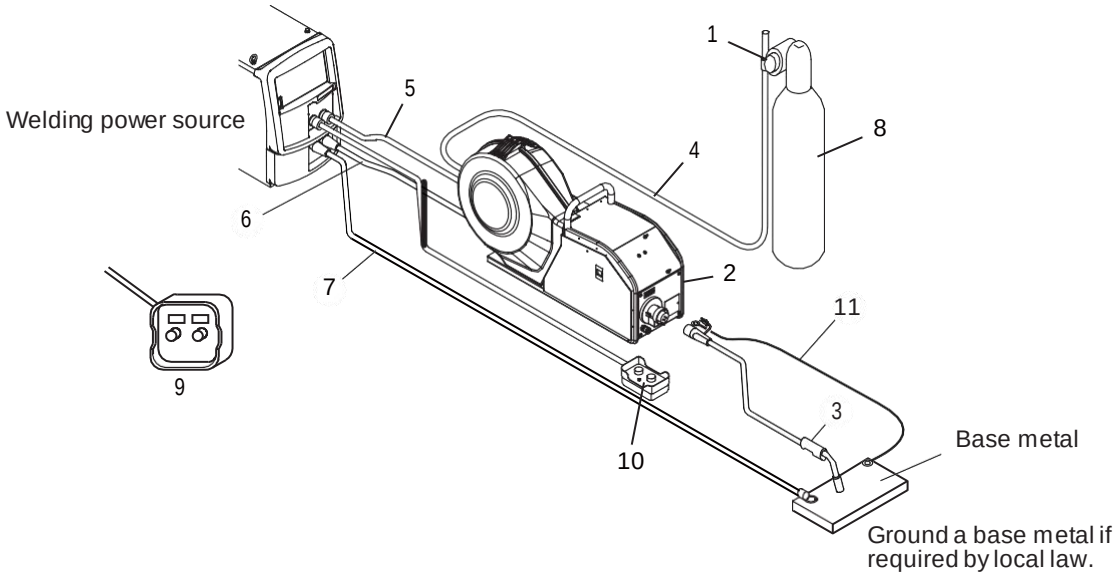

No.	Name	Supplied unit (*1)	Optional accessories	Remarks
1	Gas regulator			To be prepared by the customer. (☞ 2.2.3 Accessory (not supplied))
2	Wire feeder	○		
3	Welding torch	○		
4	Gas hose (3 m)	○		(*2)
5	Control cable for wire feeder (1.5 m)	○		(*2)
6	Power cable for torch side (2 m)	○		(*2)
7	Power cable for base metal side (2 m)	○		(*2)
8	Shielding gas			To be prepared by the customer. (☞ 2.2.3 Accessory (not supplied))
9	Digital remote control (optional)		○	(☞ 2.2.4 Optional accessories)
10	Analog remote control (3 m) (optional)		○	(*2)
11	Voltage detection cable	○		(*2)

*1: Standard component with welding power source. (Supplied when placing order for the welding power source)

*2: Optional extension cable and hose (5 m/10 m/15 m/20 m) are also available. (☞ 2.2.4 Optional accessories)

- At TIG welding:

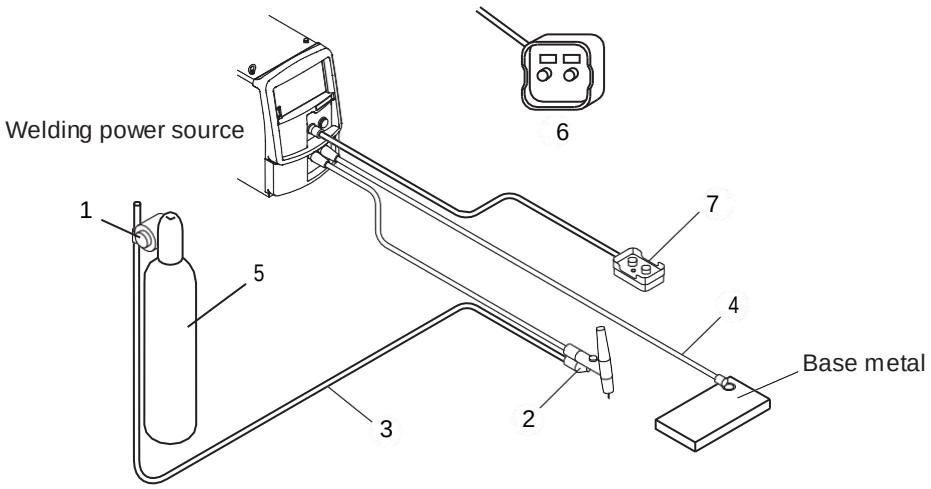

No.	Name	Supplied unit (*1)	Optional accessories	Remarks
1	Gas regulator			To be prepared by the customer. (☞ 2.2.3 Accessory (not supplied))
2	Welding torch			
3	Gas hose (3 m)	○		(*2)
4	Power cable for base metal side (2 m)	○		(*2)
5	Shielding gas			To be prepared by the customer. (☞ 2.2.3 Accessory (not supplied))
6	Digital remote control (optional)		○	(*2)
7	Analog remote control (3 m) (optional)		○	(*2)

*1: Standard component with welding power source. (Supplied when placing order for the welding power source)

*2: Optional extension cable and hose (5 m/10 m/15 m/20 m) are also available. (☞ 2.2.4 Optional accessories)

- At DC STICK welding:

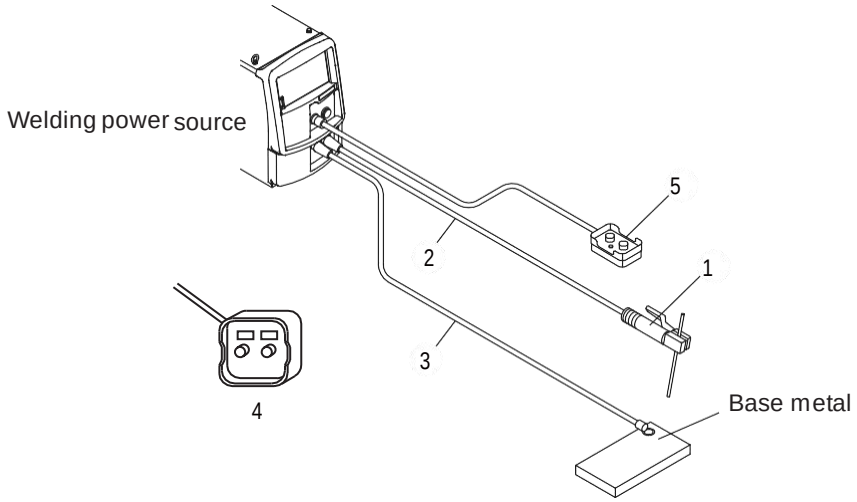

No.	Name	Supplied unit (*1)	Optional accessories	Remarks
1	Welding electrode holder			To be prepared by the customer. (☞ 2.2.3 Accessory (not supplied))
2	Power cable (38mm² or more)	○		(*2)
3	Power cable for base metal side (2 m)	○		(*2)
4	Digital remote control (optional)		○	(*2)
5	Analog remote control (3 m) (optional)		○	(*2)

*1: Standard component with welding power source. (Supplied when placing order for the welding power source)
*2: Optional extension cable and hose (5 m/10 m/15 m/20 m) are also available. (☞ 2.2.4 Optional accessories)

2.2.1.1 Wire feeder and welding torch

Wire feeder and welding torch are provided as standard component of the welding power source. Refer to the instruction manuals for details.

2.2.2 Accessory (supplied)

The section explains the accessories for the welding power source. Check for the warranty, instruction manual (this publication), and the quantity of parts when opening the package.

Product name	Part No. (Model)	Q'ty	Remarks
Voltage detection cable (base metal)	K5791G00	1	5m cable: 1pc M10 crimp-style terminal: 1pc Terminal cap: 1pc

2.2.3 Accessory (not supplied)

This section explains the accessories to be prepared by the customer before operating the welding power source.
Prepare the following:

- Shielding gas

  Use a shielding gas suitable to the welding method.

Name	Remarks
CO_2 gas	Carbon dioxide (CO_2) 100 %
MAG gas	Argon (Ar) 80 % + Carbon dioxide (CO_2) 20 %
	Argon (Ar) 90 % + Carbon dioxide (CO_2) 10 %
MIG gas	Argon (Ar)97.5 % + Carbon oxygen (CO_2) 2.5 %
MIG gas (stainless)	Argon (Ar) 98 % + Oxygen (O_2) 2 %
MIG gas (aluminum)/ aluminum-bronze/ /Silicon-bronze)	Argon (Ar) 100 %

- Gas regulator

  For the gas regulator, make sure to use a device for compressed gas cylinder that conforms to the specific application of the shielding gas.

- Cooling water circulation device

  In using the water-cooled welding torch, prepare a cooling water circulation device.

- Welding torch (for TIG welding)

  For TIG welding, prepare a torch for TIG welding as well as a gas hose.

- Welding electrode holder (for DC STICK welding)

  For DC STICK welding, prepare a welding electrode holder and a welding electrode.

2.2.4 Optional accessories

This section explains the optional accessories used with the welding power source.

2.2.4.1 Remote control, voltage detection cable and other optional items

Following items are optionally available including remote control and voltage detection cable.

Product name	Part No. (Model)	Remarks
Analog remote control	K5416Z00	Includes 3 m cable
Digital remote control	E-2454	CAN communication cable and BKCAN conversion connector are separately required.
CAN communication cable	BKCAN-0405	5 m
	BKCAN-0410	10 m
BKCAN conversion connector	K5810B00	
Welding interface unit	IFR-101WB	For robots by other manufacturer
CAN communication module	K5422C00	For using both the digital remote control and servo feeder for CAN.
PC welding monitor	K7231	
Digital interface	E-2503	(*1)
Data storage	E-2560	
Gas saver GFC	L10888	
Voltage detection cable	K5416N00	Base metal side, 10 m
Voltage detection cable	K5416G00	Base metal side, 30 m
Voltage detection cable	K5416P00	Torch side, 3 m

*1: Update of software version is required. For details, contact your dealer.

2.2.4.2 Details on extension cables and hoses

Following extension cables and hoses are optionally available.
For extending the working radius, use extension cable and hose according to the working radius.

⚠ CAUTION

- **When using extension cables, roll them out.**
  Winded extension cable may cause an unstable arc.
- **Use extension cables with suitable length.**
  Unnecessarily long extension cable may cause an unstable arc.

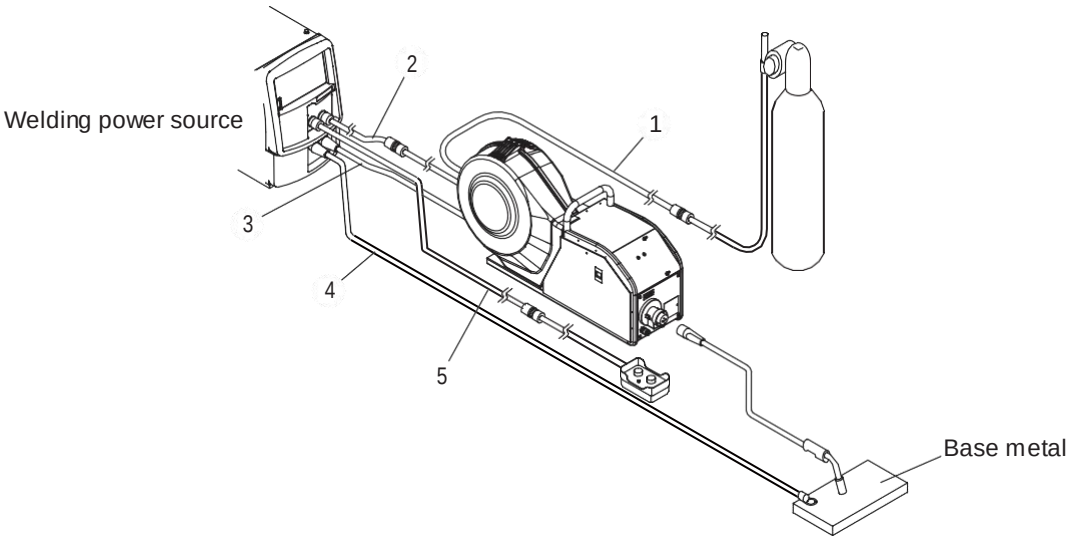

No.	Product name	Model			
1	Gas hose	BKGG-0605	BKGG-0610	BKGG-0615	BKGG-0620
2	Control cable for wire feeder	BKCPJ-1005	BKCPJ-1010	BKCPJ-1015	BKCPJ-1020
3	Power cable (torch side)	BKPDT-6007	BKPDT-6012	BKPDT-8017	BKPDT-8022
4	Power cable (base metal side)				
5	Control cable for remote control	BKCPJ-0605	BKCPJ-0610	BKCPJ-0615	BKCPJ-0620

2.3 Part Names

This section explains the part names of the welding power source.

2.3.1 Front panel

The section explains the front section of the welding power source.

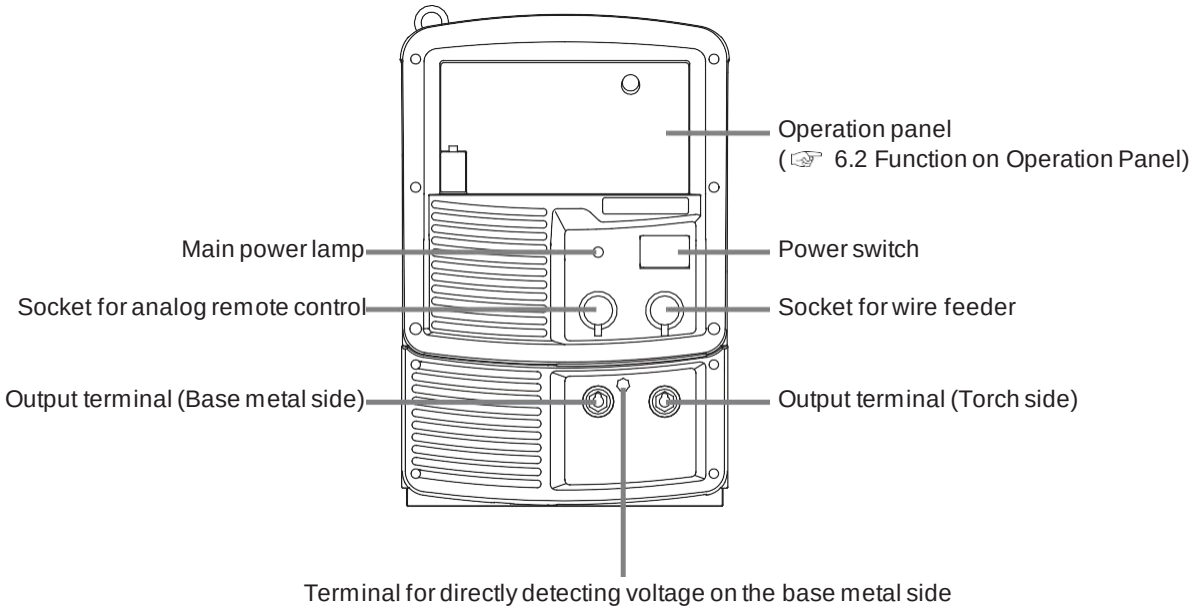

2.3.2 Rear panel

The section explains the rear section of the welding power source.

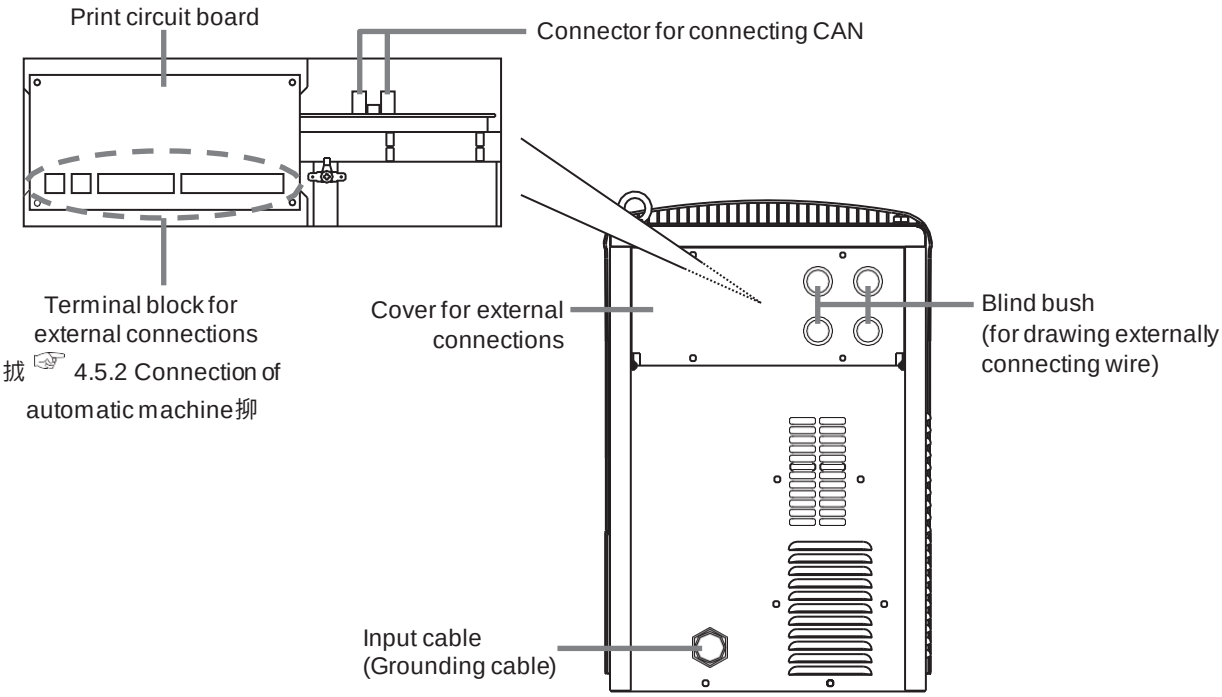

Chapter 3 Transportation and Installation

This chapter explains the necessary equipment, installation environment and transportation method for installing the welding power source.

3.1 Required Equipment

This section explains the necessary power supply equipment for installing the welding power source and equipment for preventing lack of oxygen and dust hazard during welding.

3.1.1 Welding power source equipment

For installing the welding power source, power source equipment and protective device that meet the following ratings are required.

⚠ WARNING

- **When the welding power source is used in a humid environment such as construction site, or location with highly conducting material such as steel plate or on steel structure, install a leakage breaker.**
  Otherwise, electric shock due to leakage of electricity may occur.
- **Be sure to install a switch with fuse or a circuit breaker (for motor) to the input side of each welding power source.**
  Otherwise, electric shock and fire due to overcurrent or damage to the welding power source may occur.

Equipment		Rating
Welding power source equipment	Supply voltage	400 V ± 15 % (three phases)
	Installed capacity	19 kVA or more
Protective device	Switch with fuse	Switch capacity: 40 A or more Fuse: 30 A
	No-fuse breaker (or leakage breaker) (*1)	40 A

*1: High sensitivity type leakage breaker is recommended for installing a leakage breaker. (Consult the breaker manufacturer for details)

3.1.1.1 Use of the engine generator and auxiliary power

⚠ CAUTION

- **To prevent the welding power source from being damaged or arc loss, follow the instructions below.**

When using an engine generator for the welding power source, pay attention to the following.

- Set the output voltage of the engine generator to the voltage range between 400 and 420 V at no-load welding operation.
  Setting to an extremely high output voltage may result in damage to the welding power source.

- Use an engine generator with a damper winding that has a capacity of more than twice the rated input (kVA) of the welding power source.
  Generally, the recovery time of the engine generator's voltage for load change is slower than that of the commercial power source. If the engine generator does not have sufficient capacity, sudden current change such as arc start will occur, and this may result in an abnormal decrease in output current or arcloss.
- Be sure to use a single welding power source with a single engine generator. If more than two welding power sources are combined, output voltage will become unstable with a likely result of arc loss.

Use the auxiliary power of engine welder with an improved voltage waveform.
Some engine welders have poor electricity that may cause product damage on the welding power source.

3.1.2 Ventilation equipment/partial exhaust facility

This section explains the ventilation equipment and partial exhaust facility in welding work area.

3.1.2.1 Ventilation equipment

When welding is required in tank, boiler, reaction tower, or hold of a ship, closed space, or any other places of poor ventilation, ensure to provide ventilation equipment.
Condition of ventilation equipment:
Oxygen concentration of 18 % or more must be maintained in the welding work area.

⚠ WARNING

- **Gas of larger gravity than that of oxygen, such as carbon dioxide gas or argon gas, retains at the bottom part.**
  To prevent anoxia due to the retention gas, provide ventilation equipment.
- **When it is difficult to provide ventilation equipment or the ventilation equipment does not give sufficient performance, ensure to use respiratory protective equipment.**
- **Periodically inspect the ventilation equipment to ensure correct and proper performance of ventilation.**

3.1.2.2 Partial exhaust facility

To prevent any health damage due to poisonous gas or particle substances (fume) emitted in the welding operation, provide partial exhaust facility.

⚠ WARNING

- **When it is difficult to provide a partial exhaust facility or the ventilation or exhaust facility does not give sufficient performance, ensure to use the respiratory protective equipment.**

3.2 Installation Environment

This section explains the installation environment of the welding power source.

⚠ WARNING

- **For prevention from fire or damage to the welding power source, be sure to install in a location that satisfies the following environment:**

3.2.1 Installation environment

- Location with no combustible materials or flammable gas
  If combustible materials cannot be removed, cover them with noncombustible covers.
- Location with no scattering of organic solvent, chemicals, cutting oil, and composition oil or atmosphere containing the above
  Such materials cause crack (breaking) and deterioration in the plastic part.
- Location with no exposure to direct sunlight or rain
- Robust and flat floor surface such as concrete pavement
  Assure sufficient floor face strength to ensure that the weight of welding power source can withstand.
  Face the surface with the eye bolt on upside to prevent from falling.
- Location with an ambient temperature of -10 to 40 °C
- No condensation at location with an ambient humidity of 50 % or lower (ambient temperature of 40 °C), and 90 % or lower (ambient temperature of 20 °C)
- Location with an altitude of less than 1000 m
- Location with an incline of 10° or less
- Location with no metallic foreign body such as spatter entering the welding power source
- Installation distance of 30 cm or more between the welding power source and the wall or other welding power source
  Ensure not to block the ventilation hole.
- Location with no wind on the arc section
  Install a wind shield to protect arc from wind.

3.2.2 Electromagnetic interference

To prevent electromagnetic troubles, read the following. Also, if electromagnetic troubles occur, check the following again.

Before installing arc welding equipment, the user shall make an assessment of potential electromagnetic problems in the surrounding area. The following shall be taken into account:

- Other supply cables, control cables, signalling and telephone cables, above, below and adjacent to the arc welding equipment;
- Radio and television transmitters and receivers;
- Computer and other control equipment;
- Safety critical equipment, for example guarding of industrial equipment;
- The health of the people around, for example the use of pacemakers and hearing aids;

- Equipment used for calibration or measurement;
- The user shall ensure that other equipment being used in the environment is compatible;
- The time of day that welding or other activities are to be carried out;

Methods of reducing EMC:

- Public supply system
  Add a noise filter to the input cables.
- Maintenance of the arc welding equipment
  Close and fix all doors and covers of the welding power source.
- Welding cables
  Do not use an unnecessarily long cable.
  Place a base metal cable and a torch side cable as closely as possible.
- Equipotential bonding
  Bonding of all metallic objects in the surrounding area should be considered.
- Earthing of the workpiece
  The connection of the workpiece to earth should be made by a direct connection to the workpiece, but in some countries where direct connection is not permitted, the bonding should be achieved by suitable capacitance, selected according to national regulations.
- Screening and shielding
  It is selective screening and shielding of other cables and equipment in the surrounding area.

3.3 Transportation Procedure

This section explains the procedure for transportation of the welding power source.

⚠ WARNING

- Do not touch the input and output terminals and the internal live electrical parts of the welding power source.
  It may cause electric shock.
- Shut off the input power with the disconnect switch all turned off even the distance of transportation is short.
  If work is performed while the input power is on, electric shock may occur.

⚠ CAUTION

- During transportation, be careful not to get the hand, leg or other body part caught between the welding power source and floor.
- Do not apply strong shock to the welding power source when placing it on the floor.
  It may cause damage to the welding power source.

Since large current abruptly flows inside the welding power source during welding, other machine near the welding power source may be failed due to electromagnetic noise.
Follow the instructions below:

- Do not ground the welding power source commonly with other machines.
- Close and fix all doors and covers of the welding power source.
- Do not use an unnecessarily long cables.
- Place a base metal cable and a torch side cable as closely as possible.

In the event of electromagnetic problems, follow the instructions below:

- Change the installation place of the welding power source.
- Keep the machines which may be affected away as far from the welding power source, cables, and welding site as possible.
- Add a noise filter to the input cables.

3.3.1 Transportation with lifting lug

This section explains the procedure for transportation with lifting lug such as a crane.

⚠ WARNING

For preventing falling of the welding power source and resulting accidents, be sure to observe the following:

- **For operation of a crane or hoisting, make sure that qualified personnel operate them with attention to the surrounding area for safety.**
- **Use the lifting tool such as wire and shackle suitable for the weight of the welding power source. Hoist according to the specified procedure.**
- **Lift the welding power source alone with two wires using all of the eye bolts.**
- **Do not hoist with tools and other devices placed on the welding power source.**
- **Make sure beforehand that the eye bolts on the surface of welding power source are not loose. Tighten the eye bolts when they are loose.**

STEP

1. **Attach the lifting lug with the eye bolts.**

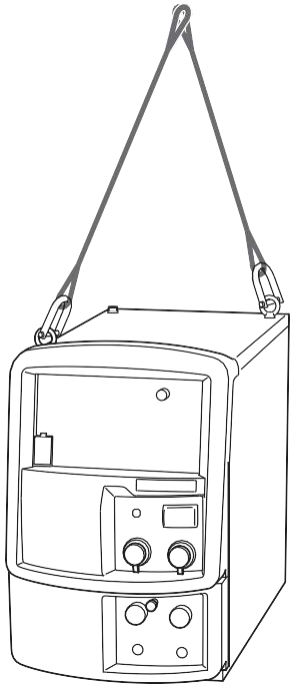

2. **Lift the welding power source carefully paying attention to the balance by using lifting lug.**

Chapter 4 Connection

This chapter explains the procedure for connecting the welding power source.

4.1 Precautions for Connection Procedure and Grounding

This section explains the precautions for connection and grounding procedure. For protection from serious injury or fire, observe the following:

⚠ WARNING

For protection from electric shock, observe the following points:

- **Wear protective equipment such as protective gloves, safety shoes and long-sleeve clothes.**
- **Do not touch the input and output terminals and the internal live electrical parts of the welding power source.**
- **Have a qualified electrical engineer ground the case of the welding power source and base metal or jig electrically connected in accordance with local regulation.**
- **Make sure to cut the input power with the disconnect switch in the box connected to the welding power source. Do not turn on the input power before confirming the completion of connection.**
- **Use a cable with specified thickness. Do not use damaged cable or cable with stripped conductor.**
- **Ensure to tighten and insulate the connection of cables.**
- **Securely attach the case and cover of the welding power source after connecting the cables.**
- **When extending the cable, use only the specified extension cable. Do not extend the cable by connecting the round terminals.**

4.2 Connecting the Welding Power Source

This section explains the procedure for connecting the welding power source. Follow the steps below for connection of the welding power source.

⚠ WARNING

- **Do not turn on the input power of the welding power source until confirming the completion of connection work. Otherwise, electric shock may occur.**

Connection of cable at output side	(☞ 4.2.1 Connection of cable at output side)
↓	
Connection of wire feeder	(☞ 4.2.2 Connection of wire feeder)
↓	
Connection of welding torch	(☞ 4.2.3 Connection of welding torch)
↓	
Connection of shielding gas	(☞ 4.2.7 Connection of shielding gas)
↓	
Connection of input power connectors	(☞ 4.3 Grounding and Connection of Input Power Supply)
↓	
Confirmation of connection	(☞ 4.4 Confirmation of Connection)

4.2.1 Connection of cable at output side

This section explains the procedure for connecting of cable at output side.

⚠ WARNING

- **Use a grounding cable for the case, of welding power source and perform grounding. Otherwise, voltage may increase in the case or base metal which could cause electric shock.**

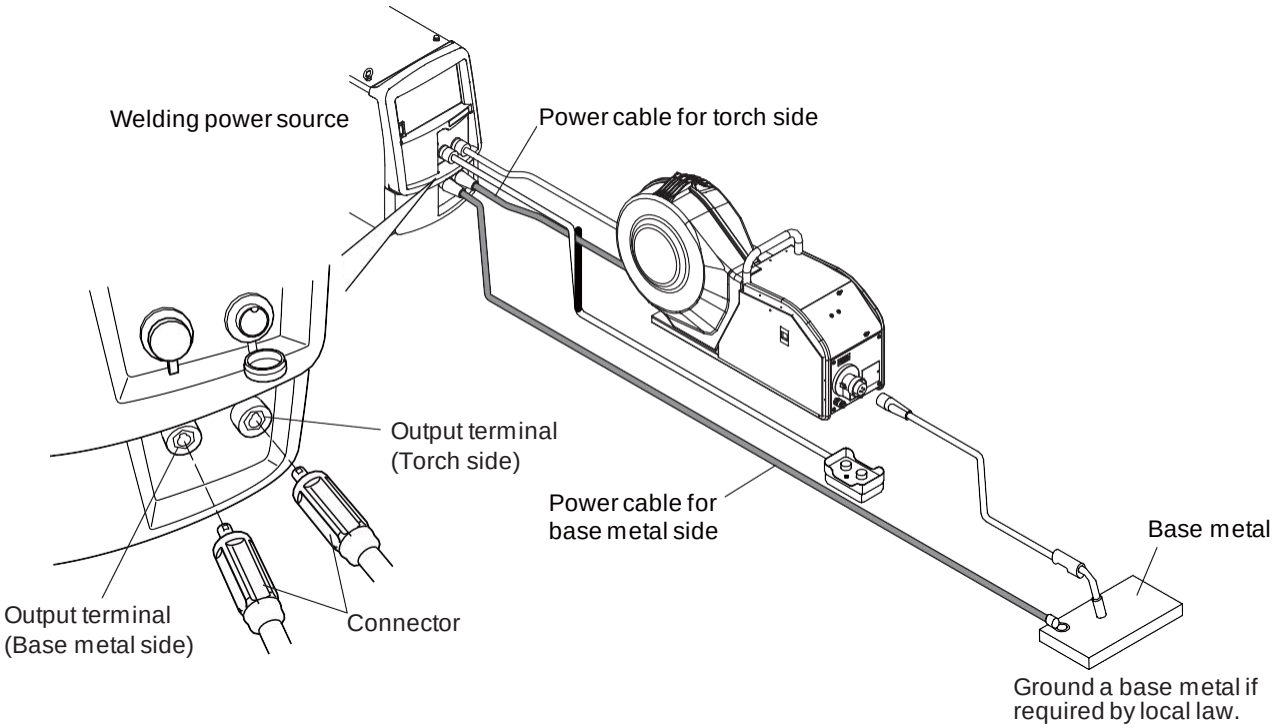

STEP

1. **Connect the power cable for base metal side to the output terminal (base metal side) and base metal.**
   - At the welding power source side, fit the convex part of the connector and concave part of the output terminal for secure connection and tighten them in the clockwise direction.
2. **Connect the power cable for torch side to the output terminal (torch side).**
   - Connect the connectors as same as above.

Connection for cable at output side is complete. Procedure is followed by 4.2.2 Connection of wire feeder.

4.2.2 Connection of wire feeder

This section explains the connecting procedure of the wire feeder. Refer also to the instruction manual of wire feeder.

⚠ CAUTION

- **When not using an analog remote control (optional accessory), do not remove the cap for the analog remote control.**

TIPS

- **When operating the welding power source by connecting to a robot, wiring for the wire feeder needs to be changed. (☞ 4.6 Wiring of Voltage Detection Cable at Base Metal Side)**

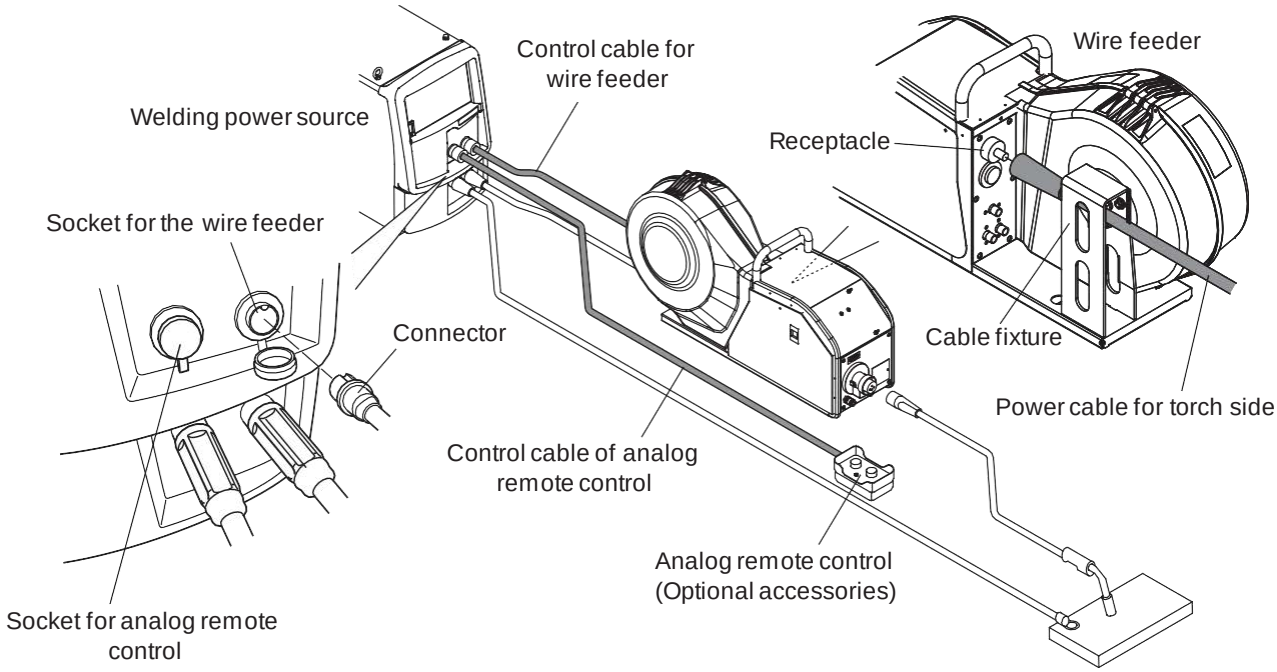

STEP

1. **Connect the power cable for wire feeder (torch side) to the receptacle.**
   - Firmly attach the power cable for torch side by turning the connector in the clockwise direction.
2. **Remove the cap of the socket of wire feeder and insert the control cable (10 cores) to the socket for the wire feeder.**
   - Fit the concave part of the connector and convex part of the socket for secure connection and tighten the knurled screws in the clockwise direction.
   - When using an analog remote control (optional accessory), remove the cap of socket for analog remote control and insert the control cable (6 cores).

Connection for wire feeder is complete. Procedure is followed by 4.2.3 Connection of welding torch.

4.2.3 Connection of welding torch

This section explains the procedure for connecting the welding torch.

TIPS

- When the air-cooled welding torch (with voltage detection) is used, refer to "4.2.4 Connection of voltage detection cable (Voltage detection cable is used)".

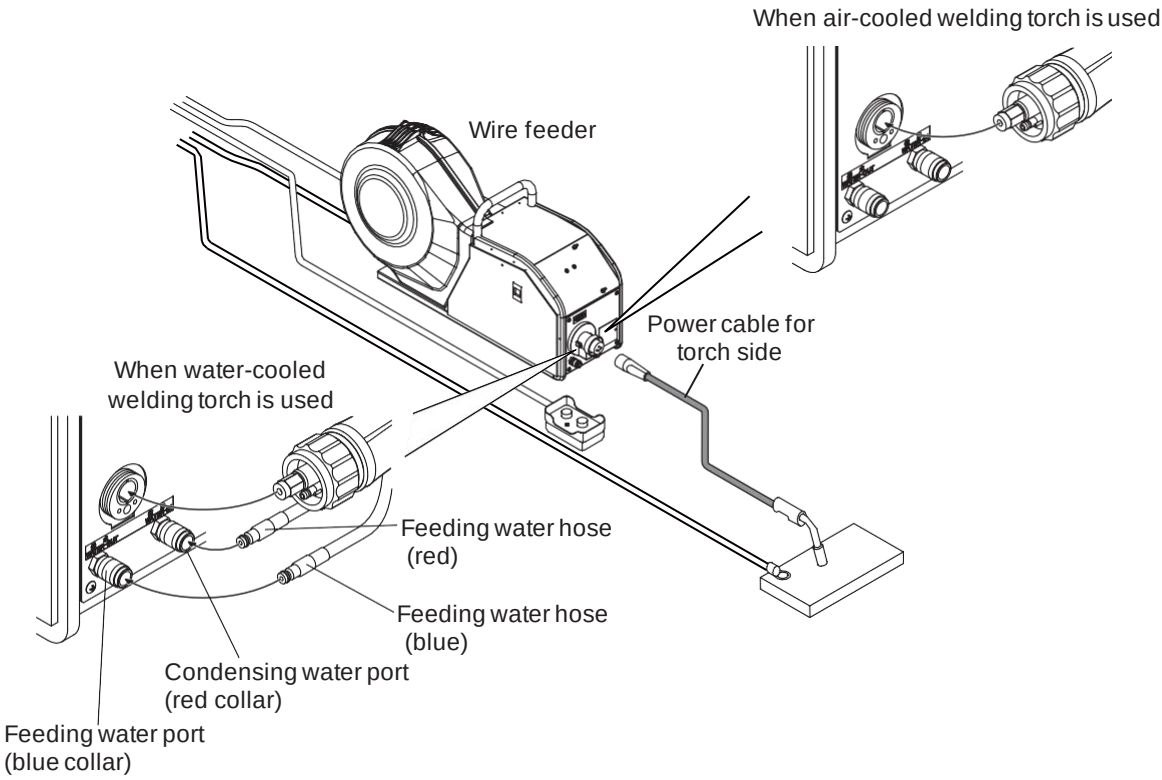

STEP

1. **Connect the torch cable to the wire feeder.**
   - Fit the form of the connector with that of the terminal, for secure connection and tighten the knurled screws in the clockwise direction.
2. **When using the water-cooled welding torch, connect the water feeding hose and condensing hose of the welding torch to the wire feeder.**
   - Fully insert the hose end to the connection port of wire feeder.
     For disconnection, hold the hose end, and press the collar part to the arrow mark direction shown in the figure.

Connection for welding torch is complete.

4.2.4 Connection of voltage detection cable (Voltage detection cable is used)

This section explains the procedure for connecting the voltage detection cable.

TIPS

- **For connection of welding torch, refer also to "4.2.3 Connection of welding torch".**

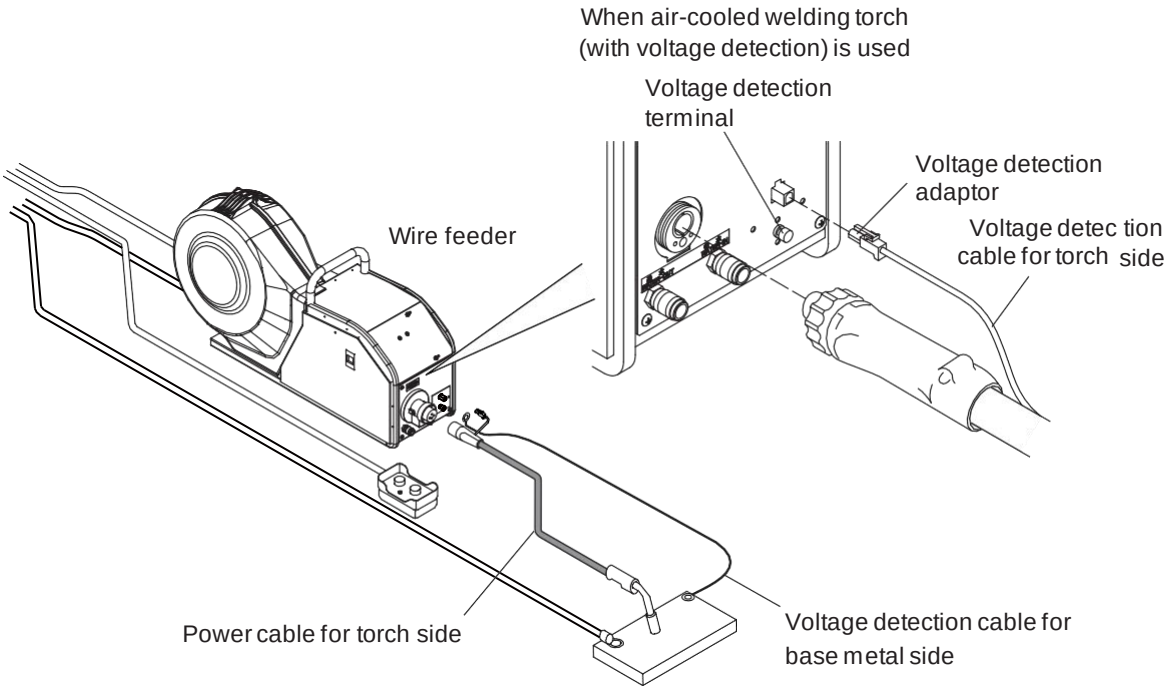

STEP

1. **Connect the torch cable and the voltage detection adapter to the wire feeder.**
2. **Cut the voltage detection cable for base metal side to a suitable length.**
3. **Connect the voltage detection cable for base metal side to the base metal.**
4. **Connect the voltage detection cable for base metal side to the voltage detection terminal of the wire feeder.**

TIPS

- **Voltage detection cable for base metal side can also be connected to the direct voltage detection terminal for base metal of the welding power source. When using the welding power source by lifting with hoisting equipment, connect the voltage detection cable for base metal side to the direct voltage detection terminal for base metal side.**

For reducing the influence of inductance noise, take note of the following caution on connection and wiring example of voltage detection cable.

Connection for voltage detection cable is complete. Procedure is followed by "4.2.7 Connection of shielding gas".

4.2.4.1 Caution on connection of voltage detection cable

Voltage detection cable needs to be wired so that arc voltage can be fed back with accuracy. Be sure to check the following for reducing the influence of inductance noise.

- Wire the voltage detection cable for the base metal away from the cable of base metal. For easier handling, cut the voltage detection cable for base metal side to a suitable length.

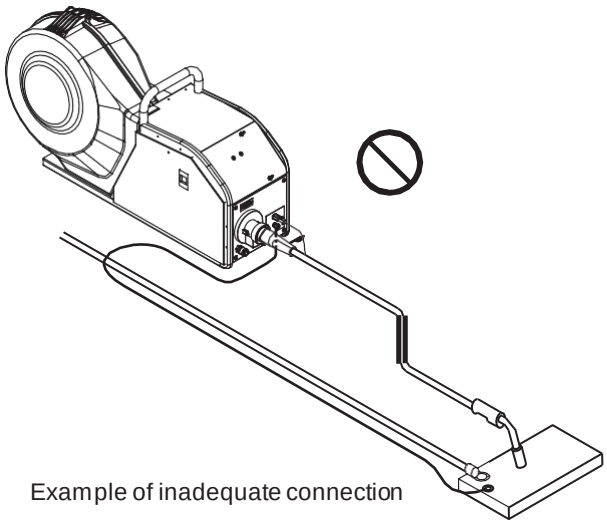

Example of inadequate connection

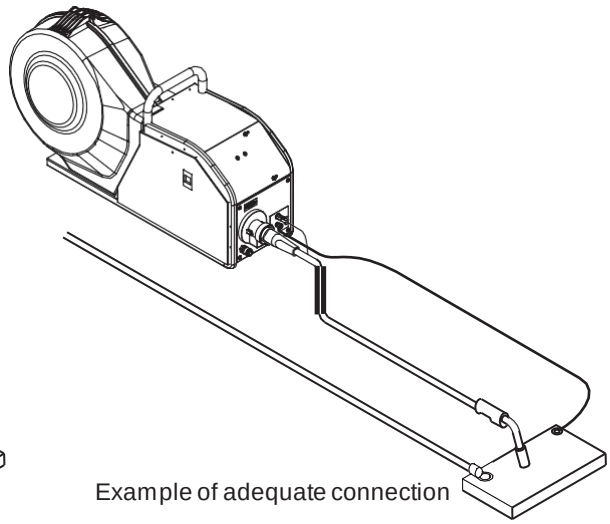

Example of adequate connection

- Wire the voltage detection cable of the base metal side close to the one at the torch side (detection wire) to narrow the area surrounded by the two voltage detection cables.

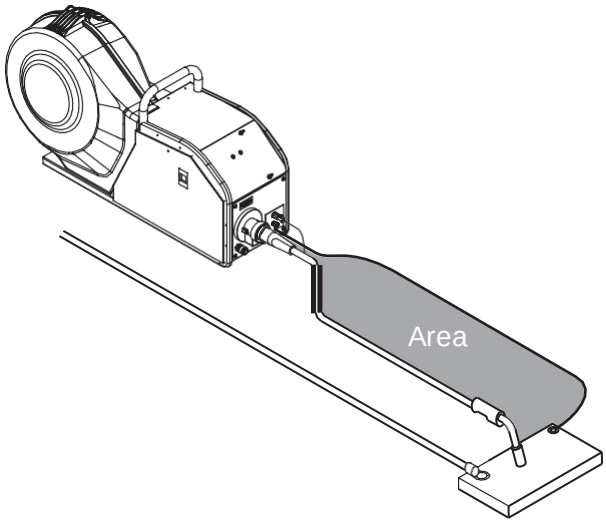

4.2.5 Connection at TIG welding

⚠ CAUTION

- **In using the welding power source for TIG welding, prepare a welding torch by the customer.**
- **Contrary to the normal connection, the TIG welding requires connection of the welding torch to the output terminal (base metal side). Also, connect the power cable for base metal side to the output terminal (torch side).**
- **After five seconds have passed, the safety voltage (approx.15 V) is automatically provided.**

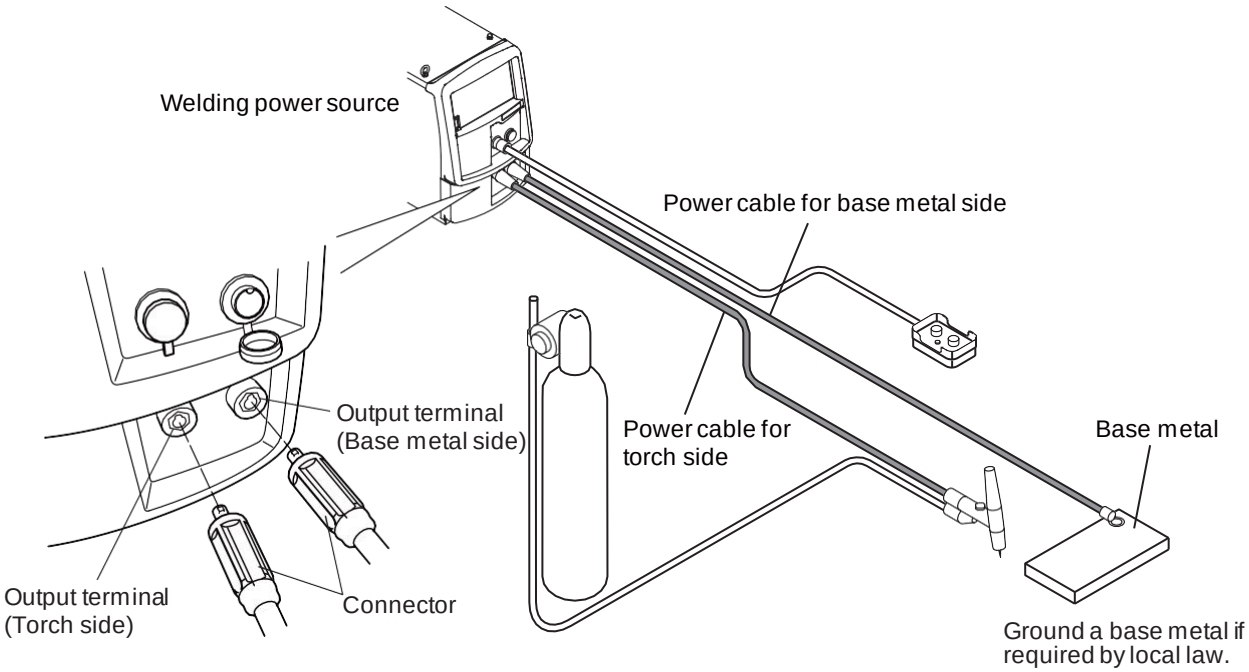

STEP

1. **Connect the power cable for torch side to the output terminal (base metal side).**
   - At the welding power source side, fit the convex part of the connector and concave part of the output terminal for secure connection and tighten them in the clockwise direction.
2. **Connect the power cable for base metal side to the output terminal (torch side) and base metal.**
   - Connect the connectors as same as above.

4.2.6 Connection at DC STICK welding

⚠ CAUTION

- **In using the welding power source for DC STICK welding, prepare a welding electrode holder by the customer.**
- **After five seconds have passed, the safety voltage (approx.15 V) is automatically provided.**

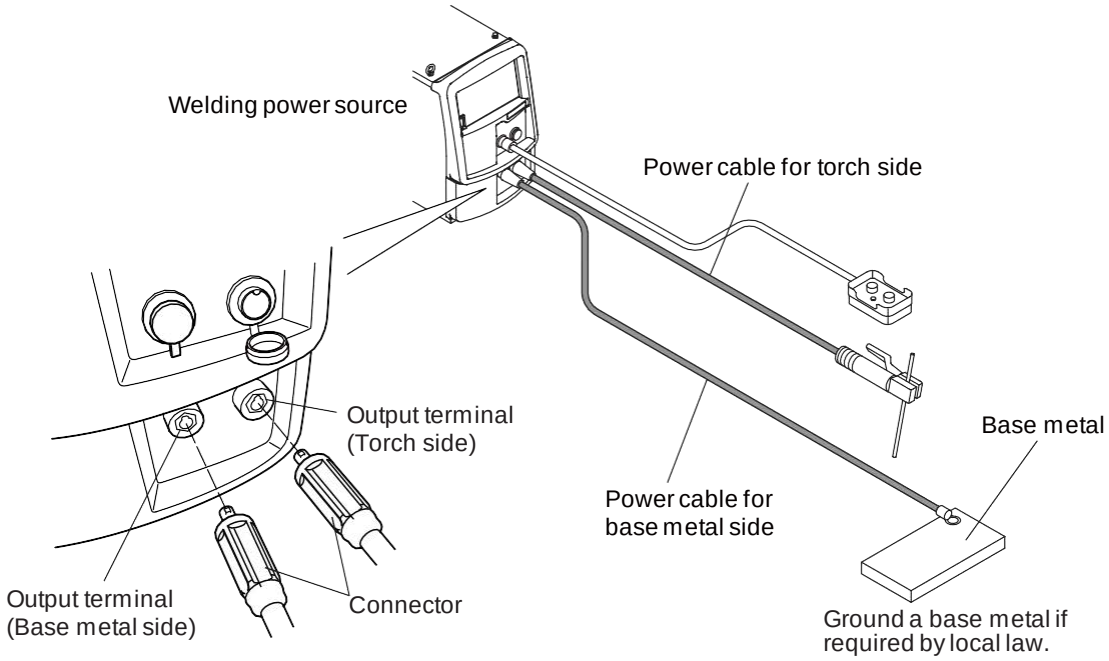

STEP

1. **Connect the power cable for base metal side to the output terminal (base metal side) and base metal.**
   - At the welding power source side, fit the convex part of the connector and concave part of the output terminal for secure connection and tighten them in the clockwise direction.
2. **Connect the cable for welding electrode holder side to the output terminal (torch side).**
   - Connect the connectors as same as above.

4.2.7 Connection of shielding gas

This section explains the procedure for connecting the the shielding gas. Refer also to the instruction manual of wire feeder.

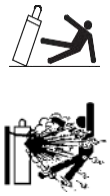

⚠ WARNING

- **Be sure to observe the following points to prevent from suffocation due to gas leakage or explosion.**
  - **Be sure to turn off the shielding gas at the main tap when the welding power source is not in use.**
  - **Securely connect the gas hose and attach the gas regulator with a wrench so that there is no gas leakage.**
- **For the gas regulator, make sure to use a device for compressed gas cylinder that conforms to the specific application of the shielding gas.**
  Using an inappropriate gas regulator may cause explosion.
- **Keep the cylinder upright and securely chained to a stationary support or a rack.**
  Falling or tipping of cylinder may cause serious injury.
- **After five seconds have passed, the voltage is automatically provided.**

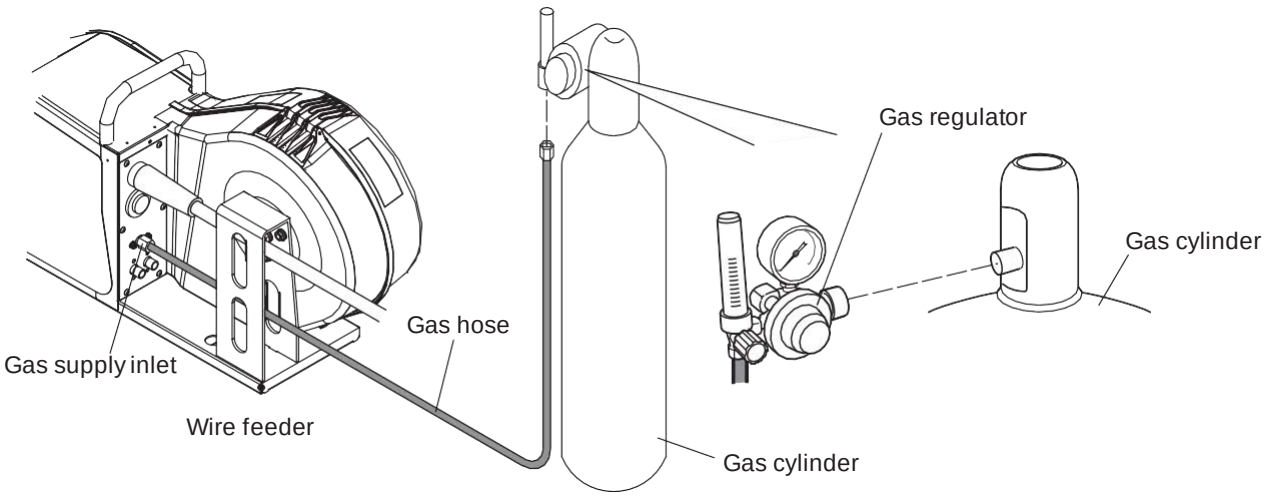

STEP

1. **Attach the gas regulator to the gas cylinder.**
2. **Connect the gas hose to the gas regulator and the wire feeder.**
   - For TIG welding, connect the gas hose to the welding torch for TIG welding.

Connection for shielding gas is complete.
In using the air-cooled welding torch, continue to perform the step described in "4.3 Grounding and Connection of Input Power Supply".

4.3 Grounding and Connection of Input Power Supply

This section explains the procedure for performing grounding work, connecting the welding power source and input power supply (power supply at facility side).

⚠ WARNING

- **When the welding power source is used in a humid environment such as construction site, or location with highly conducting material such as steel plate or on steel structure, install a leakage breaker.**
  Otherwise, electric shock due to leakage of electricity may occur.
- **Be sure to install a switch with fuse or a circuit breaker (for motor) to the input side of each welding power source.**
  Otherwise, electric shock and fire due to overcurrent or damage to the welding power source may occur.
- **If the welding power source which is not grounded is used, voltage will be generated in the case through the capacitor between the welding power source input circuit and the case or floating capacity (electrostatic capacity naturally generated between the input conductor and the case metal). If you touch the case, you may suffer from electric shock. Be sure to ground the case of the welding power source.**
- **Be sure to connect the input cable (3 pcs) in the correct position and securely tighten them to the terminal block.**
  Improper connection may cause electric shock, fire, and damage to the welding powersource.

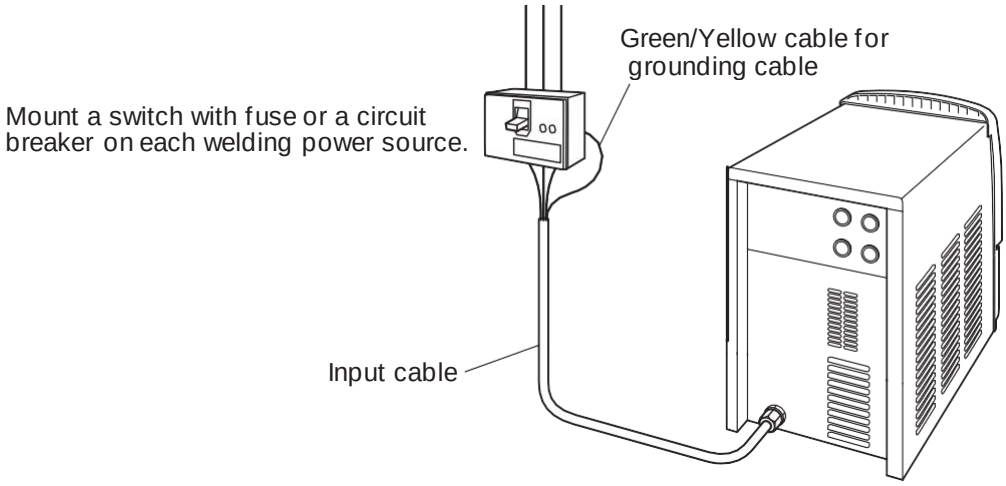

STEP

1. **Check that input power is turned off with the disconnect switch connected to the welding power source.**
2. **Perform grounding work for welding power source.**
   - Grounding cable : AWG10 (5.3 mm^2) with 10 mmΦ terminal × 1

   * The grounding cable is a striped pattern in yellow and green.

3. **Connect the power cables (3 pcs) to the output terminals of power source at facility side.**
   - Input cable: AWG10 (5.3 mm^2) with 10 mmΦ terminal × 3

Grounding and connection of input power supply is complete. Procedure is followed by 4.4 Confirmation of Connection.

4.4 Confirmation of Connection

This section explains the point of confirmation after completing all of the connections. Check for the following after the connection is complete.

- No looseness in the cable connections
  If looseness is found, tighten it to secure the connection.
- No cable of other equipment is connected to the breaker to which input cable of the welding power source is connected.
  Connect only the cable of the welding power source to the breaker.
- Capacity of the disconnect switch and the rating of fuse and circuit breaker are appropriate. (☞ 3.1.1 Welding power source equipment)
- Perform grounding for the case of the welding power source.
  Ground terminal is properly grounded when grounding cable of the welding power source is connected to the breaker's ground terminal.
- No tools or equipments are left placed on the surface of the welding power source.
  Do not place any material on the surface of the welding power source.

4.5 Connection of External Equipment

This section explains the method for connecting the welding power source with robots and automatic machines.

4.5.1 Connection of robot

This section explains the configuration example of connecting the welding power source with robots made by other manufacturer.

4.5.1.1 Configuration example for connection

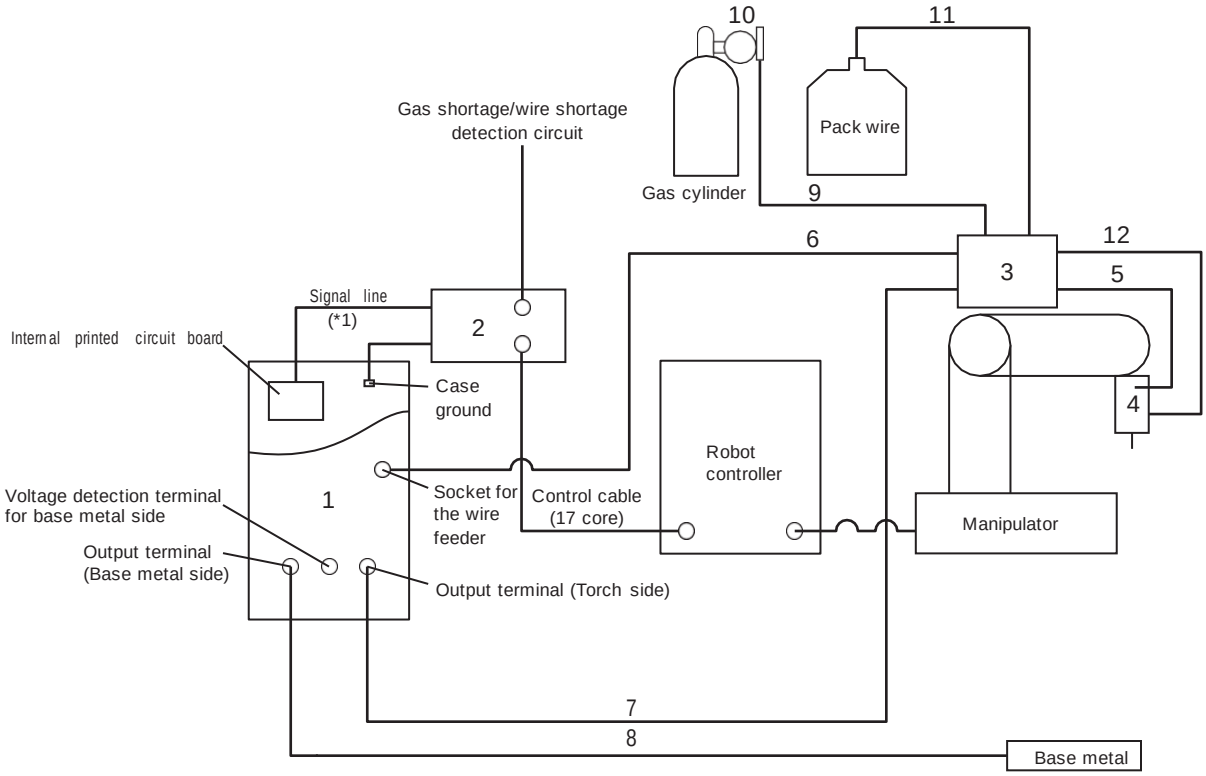

*1: The welding power source is equipped with a built-in interface.

No.	Product name/Model	Remarks
1	Welding power source	
2	Interface: IFR-101WB	Connection robot controller cable (optional) is also available. (☞ Refer to instruction manual of Interface)
3	Wire feeder	Wiring for wire feeder needs to be changed. (☞ 4.6.1 Wiring to wire feeder)
4	Welding torch: K2331 type curved torch	
5	Uni-cord power cable: K5369(1.1 m), K5370(1.2 m)	
6	Control cable for wire feeder: BKCPJ-1010 (10 m)	For details on cables, see: (☞ 2.2.4.2 Details on extension cables and hoses)
7	Cable at torch side: BKPDT-6012 (10 m)	
8	Cable at base metal side: BKPDT-6012 (10 m)	
9	Gas hose: BKGG-0610 (10 m)	
10	Gas regulator	To be prepared by the customer.
11	Conduit: Z318P50 (Guide adaptor attachment part: 9/16-18UNF)	When using the conduit 7/16-20UNF, guide adaptor L7810D04 is also required.
12	Voltage detection cable (torch side): K5416P00 (3m)	Wiring for wire feeder needs to be changed. (☞ 4.5.1.2 Wiring of wire feeder)

4.5.1.2 Wiring of wire feeder

In the welding of DC low spatter, wiring of the wire feeder needs to be changed and voltage detection from the torch end is required.

⚠ WARNING

- **Perform the work after turning the input power off with the switch in the switch box connected to the welding power source. Otherwise, electric shock may occur.**

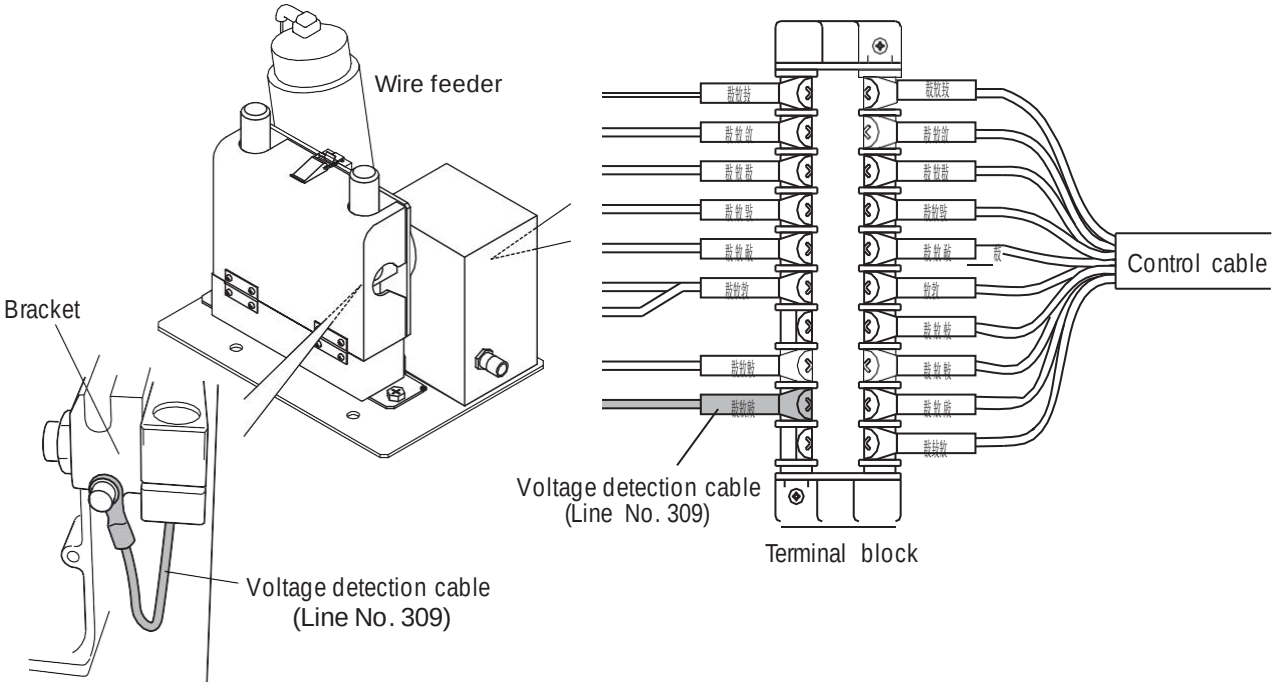

STEP

1. **Check that input power is turned off with the switch in the switch box connected to the welding power source.**
2. **Remove (or open) plates in the right side and left side of the wire feeder.**
3. **Remove the voltage detection cable (line No. 309) connected to the terminal block and connect the voltage detection cable for torch side (K5416P00: optional accessory)**
   - Connect the other end of the voltage detection cable for torch side (K5416P00) to the tip of the torch.
   - Use the voltage detection cable for torch side (K5416P00) with a blind bush.
4. **Remove the voltage detection cable (line No. 309) connected to the bracket.**
5. **Restore the plates in the right side and left side of the wire feeder.**

Wiring for the wire feeder is complete.

4.5.2 Connection of automatic machine

This section explains the procedure for connection of automatic machine with the welding power source.

4.5.2.1 Wiring for connecting automatic machine

The welding power source is equipped with terminal block for external connection inside the cover for external connection at the rear. When connecting to the automatic machine, use this terminal block for external connection.

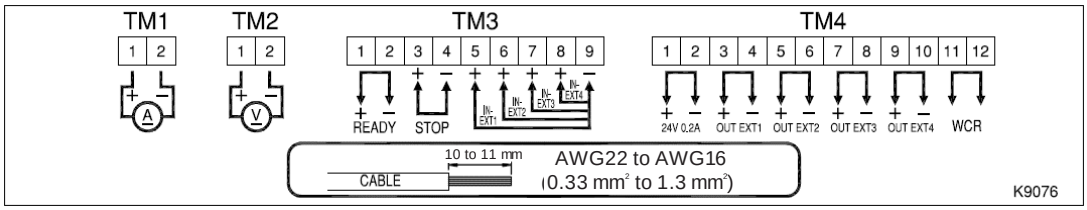

Terminal No.		Signal name		Function
TM1	1-2	A	Output for ammeter	Output terminal to connect a separately sold Ammeter (400 A/ 60 mV) Part No. : 4403-057
TM2	1-2	V	Output for voltmeter	Output terminal to connect a separately sold Voltmeter (75 V F.S.) Part No.: 4401-016
TM3	1-2	READY	Power ready output	When the welding power source side is ready to start welding, the contact between the terminals closes. When an error is detected, the contact opens.
	3-4	STOP	Operation stop input	Disconnecting the terminals stops output of the welding power source. When combining switches, use a push-lock, turn-reset switch for preventing accidental reset.
	5-9	IN-EXT1	External input 1	Reserve inputs for expanding terminal functions. Setting the internal functions (Function) allows you to externally open and close the gas valve and perform inching operation. (☞ 6.7 Setting Internal Functions)
	6-9	IN-EXT2	External input 2	
	7-9	IN-EXT3	External input 3	
	8-9	IN-EXT4	External input 4	
TM4	1-2	24 V 0.2 A	24 V power source	Outputs power supply of 24 V. Current capacity: 0.2 A (Maximum)
	3-4	OUT EXT1	External output 1	Reserve outputs for expanding terminal functions. No function is allocated in the standard specification.
	5-6	OUT EXT2	External output 2	
	7-8	OUT EXT3	External output 3	
	9-10	OUT EXT4	External output 4	
	11-12	WCR	WCR output	When welding current is detected, the contact between the terminals closes.

- <u>Input signal of the external connection terminal block</u>
  Use switches and relays with contact capacity of 24 V/10 mA or more for connecting with the input terminal.

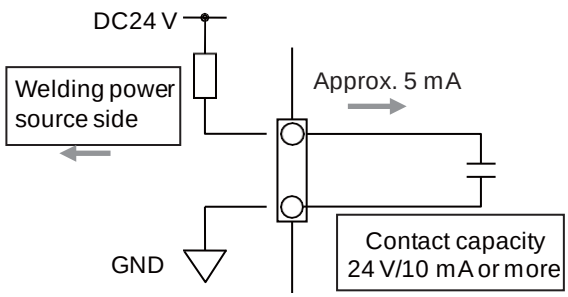

- Output signal of the external connection terminal block
  Output signal is open collector output. Ensure to keep the maximum rated power of the transistor.

  Maximum rated power of transistor
  READY: DC50 V/100 mA
  OUT EXT1 to 4: DC50 V/100 mA

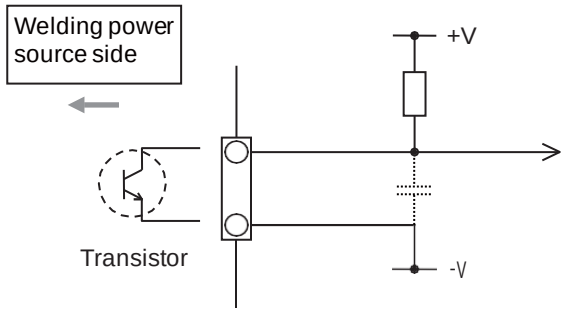

- WCR output signal
  WCR signal is the output of relay contact. Ensure to keep the maximum rated power of the contact.

  Maximum rated power of relay contact
  WCR: DC80 V/100 mA

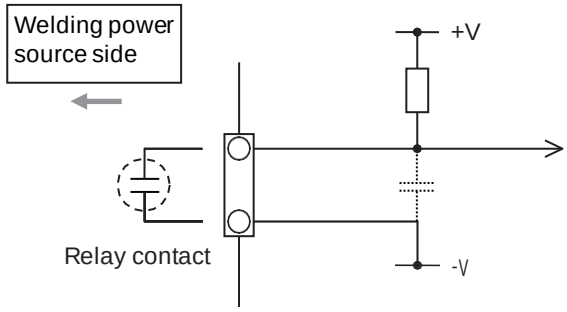

NOTE

- Connect welding power source and target device after carefully read the instruction manual of target device. Add current limiting resistor if capacitor is connected to the contact of target device.

4.5.2.2 Connection of terminal for external connection

This section explains the procedure for connection to the terminal for external connection.

⚠ WARNING

To prevent electric shock, ensure to follow the instructions below:

- Wiring should be performed by qualified persons or persons familiar with the welding machine.
- Do not touch the input and output terminals and the internal live electrical parts of the welding power source.
- Before starting the work, make sure to cut the input power with the disconnect switch connected to the welding power source and wait three minutes or more. In addition, do not turn on the primary power until the work is complete.
- Do not use damaged cable or cable without grounding.
- Securely attach the case and cover of the welding power source after connecting the cables.

Use the following cable for connecting to the terminal for external connection:

- Cable thickness: AWG22 to AWG16 (0.33 to 1.3 mm^2)
- Using a cable or terminal not specified will be a cause of heat generation and fire. Furthermore, cable other than specified cannot be connected to the terminal for external connection.

⚠ CAUTION

- **The control cable drawn out from the terminal for external connection should be kept away from the welding power cable or the torch cable as much as possible. Otherwise, failure may occur due to noise during use.**
- **Do not pull out the cables other than the cable that is connected with the terminal block on the printed circuit board. Malfunction or error may occur.**

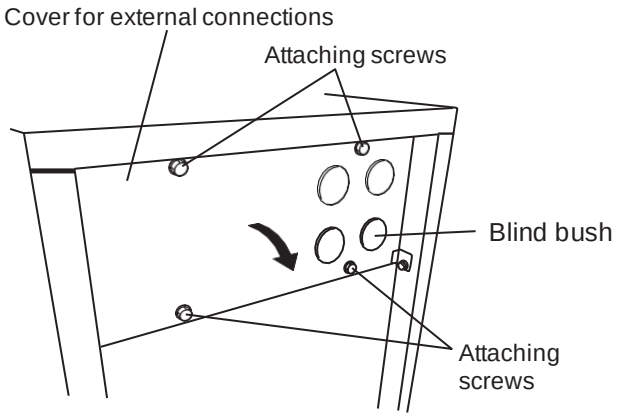

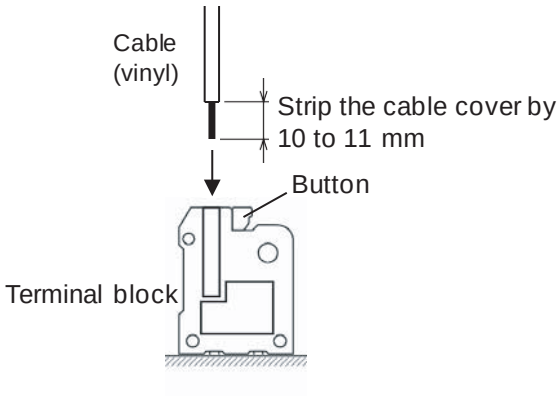

STEP

1. **Check that input power is turned off with the disconnect switch connected to the welding power source.**
2. **Remove the attaching screws and open the cover for external connection.**
3. **Include a cutting in a cross mark at the blind bush using a knife and pass the cable through.**
   - Process any given blind bush among the several available types.
4. **Connect the cable to the terminal for external connection.**
   - Strip the cable cover by 10 to 11 mm from the end while pressing the button on the terminal block and insert the cable.
5. **Check the wiring and place the cover for external connection back to the welding power source.**

4.6 Wiring of Voltage Detection Cable at Base Metal Side

When the extension cable is 30 m or more in length in total, use of the voltage detection cable at the base metal side is recommended.
The voltage detection cable needs to be wired so that the correct feedback of the arc voltage can be obtained. Connect the voltage detection cable as near as possible to the base metal to avoid detection of voltage decrease.
Use the voltage detection cable at base metal (optionally available: K5416N00 or K5416G00) by connecting with the wire feeder or to the voltage direct detection terminal at the base metal side on the front of welding power source.
When using the voltage detection cable, set the internal function F38 to "ON". (☞ 6.7.1 Setting procedure)
Details on the internal function F38 (☞ 6.7.2.27 F38: Arc voltage direct detection switching)

⚠ WARNING

- **Ensure to start the operation only after shutting off the input power by the contactor of the power distribution box connecting the welding power source. Otherwise, electric shock may occur.**

4.6.1 Wiring to wire feeder

This section explains how to connect the voltage detection cable at the base metal side to the wire feeder.

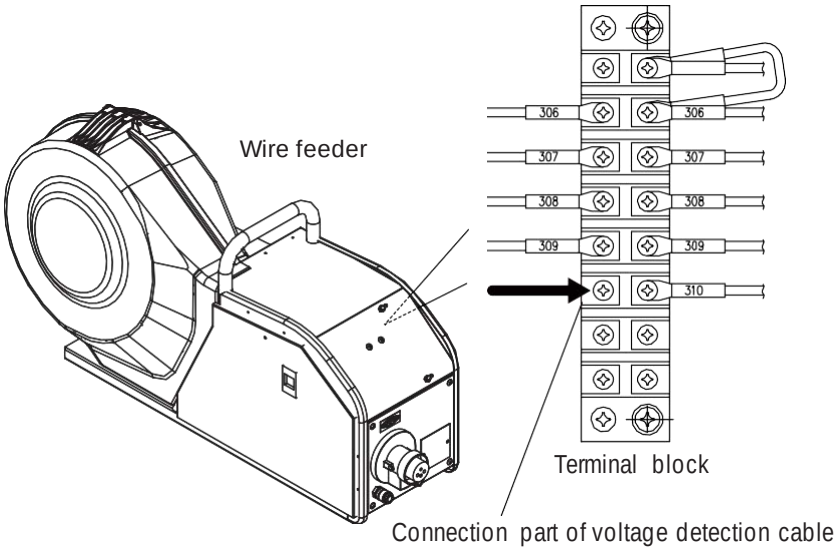

STEP

1. **Check that input power is turned off with the disconnect switch connected to the welding power source.**
2. **Remove the right side panel of the wire feeder.**
3. **Connect the voltage detection cable at the base metal side to the terminal board in the wire feeder (wire No. 310).**
   - Use the voltage detection cable at the base metal side via the blind bush with film.

4. **Restore the right side panel of the wire feeder.**

Wiring of voltage detection cable is complete.

4.6.2 Wiring to welding power source

This section explains how to connect the voltage detection cable at the base metal side to the voltage direct detection terminal at the base metal side of the welding power source.

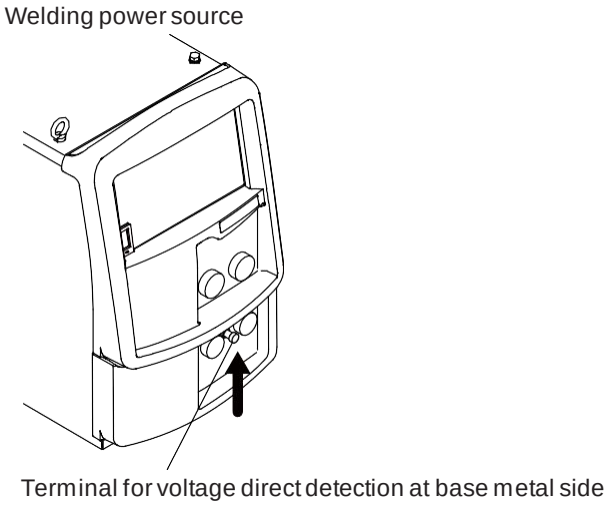

STEP

1. **Check that input power is turned off with the disconnect switch connected to the welding power source.**
2. **Connect the voltage detection cable at the base metal side to the voltage direct detection terminal at the base metal side.**

Wiring of voltage detection cable is complete.

4.6.3 Wiring example of voltage detection cable

This section shows the wiring examples of the voltage detection cables at the base metal side to the base metal.

4.6.3.1 Wiring examples for plural welding stages

Connect the voltage detection cable at the base metal side to the stage to which the cable on the base metal side was last connected.

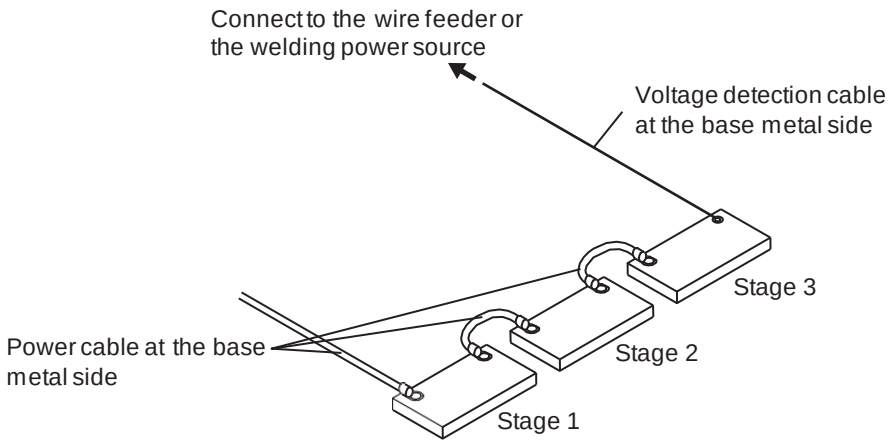

4.6.3.2 Wiring example when power is supplied with a power feeding brush to the positioner

Insulate the power feeding brush from the jig base and connect the voltage detection cable (base metal side) to the jig base.

TIPS

- **Before wiring the voltage detection cable, check that conduction between the jig base and the base metal is stable.**

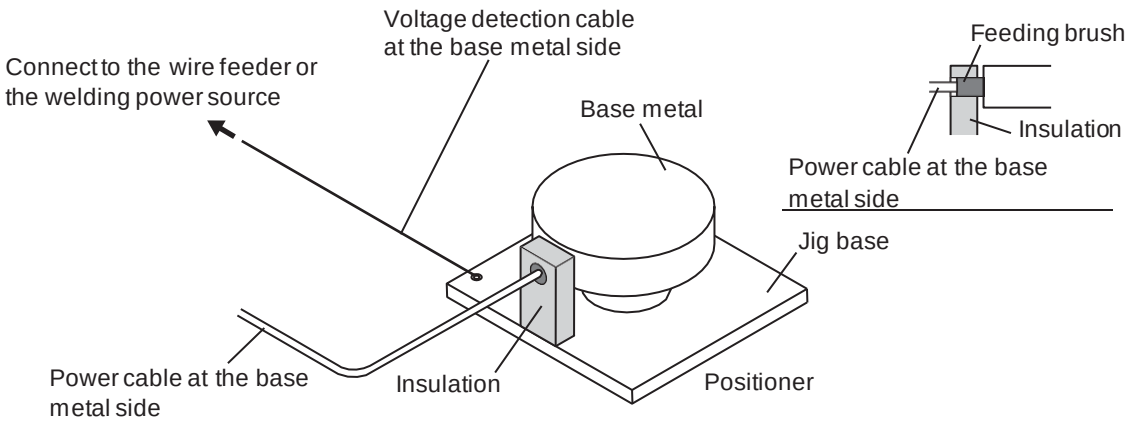

Chapter 5 Welding Operation

This chapter explains the procedures from preparation to completion of the welding operation.

5.1 Precaution at Welding Operation

This section explains the safety precautions for welding operation.

5.1.1 Precautions for air discharge and use of respiratory protective equipment

To prevent suffocation or gas poisoning in the welding operation, ensure to follow the instructions below:

⚠ WARNING

- When welding is required in tank, boiler, reaction tower, or hold of a ship, closed space, or any other places of poor ventilation, ensure to provide ventilation equipment.
- Gas of larger gravity than that of oxygen, such as carbon dioxide gas or argon gas, retains at the bottom part.
  To prevent anoxia due to the retention gas, provide ventilation equipment.
- When it is difficult to provide ventilation equipment or the ventilation equipment does not give sufficient performance, ensure to use respiratory protective equipment.
- For preventive measure from falling due to anoxia, apply lifelines such as a safety belt.
- For the welding operation in a narrow space, perform the operation with the trained supervisor.
- Periodically inspect the ventilation equipment to ensure correct and proper performance of ventilation.

To prevent any health damage due to poisonous gas or particle substances (fume) emitted in the welding operation, ensure to follow the instructions below:

⚠ WARNING

- To reduce the dust concentration, install a partial exhaust facility such as fume suction device, or install the collective ventilation equipment.
- When it is difficult to provide a partial exhaust facility or the ventilation or exhaust facility does not give sufficient performance, ensure to use the respiratory protective equipment.
- In performing welding or cutting the coating steel plate or galvanized steel sheet, provide a partial exhaust facility or let the welding operator as well as the surrounding operators use respiratory protective equipment. (Welding or cutting the coating steel plate or galvanized steel sheet will cause toxic gas or fume.)
- Do not perform welding operation in the vicinity of degreasing, cleansing, or spraying operation. Performing the welding operation in such places may generate poisonous gas.

5.1.2 Precaution for protective equipment

For protection from arc ray generated from welding, spatter and spattering dross and hearing disorder from noise, observe the following:

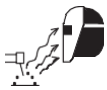

⚠ WARNING

- **Wear safety goggles with sufficient blocking effect or face shield in the work area and the surrounding.**
  Ignoring the above may cause inflammation and burn from arc ray.
- **Wear safety goggles in the work area and the surrounding.**
  Ignoring the above may cause injury in the eye or burn from spatter and spattering dross.
- **Wear protective equipment such as protective leather gloves, long-sleeve clothes, leg covers, and leather apron.**
  Ignoring the above may cause electrical shock and burn.
- **Install protective screens or barriers to protect the eyes of others in the work area from arc ray.**
- **Wear an ear protector when noise level is high.**
  Ignoring the above may cause hearing disorder.

5.1.3 Precautions on welding place

To avoid poor welding, ensure to follow the instructions below:

⚠ CAUTION

- **When the welding is performed outside with wind or when wind is caused by the indoor ventilation facility (including fan), provide a partition to avoid the arc generating part being exposed to wind.**

5.2 Check before Welding

This section explains the check parameters before welding. To avoid welding problems beforehand, check the parameters below when the welding environments are prepared. (These are the check parameters recommended by Gedik Welding. They also contain check parameters after power ON or after shield gas supply.)

For handling the cooling water circulation device, refer to the instruction manual of the cooling water circulation device. (When using the water-cooled welding torch)

	Check parameter	Countermeasures	Check
1	There should be no loose connections of the cables.	Use a proper tool to ensure connection.	
2	There should be no dirt such as oil or spatter adhering on the connection terminals or connection part of cables.	Wipe off dirt so that the metal face of connection terminal or connection part is fully exposed. Using a metal brush is effective.	
3	There should be no tightening together of the voltage detection cable (base metal side) and the cable at the base metal side.	Connect the voltage detection cable (base metal side) and the cable at the base metal side separately to a different location. Each cable should be connected to the position near to the workpiece to be welded.	

	Check parameter	Countermeasures	Check
4	The voltage detection cable should be adequately wired.	The voltage detection cables at the base metal side and the torch side should be wired along each other. Keep the voltage detection cable (base metal side) at least 10 cm away from the cable at the base metal side.	
5	The voltage detection cable should not be damaged.	If any damage is suspected, use a tester to measure the resistance between the voltage detection cables. When the resistance is 0.01 Ω or more, replace the voltage detection cable with a new one.	
6	The contact part of jig and welding work piece should not be painted.	Painted contact part could cause increased contact resistance, resulting in decrease in arc voltage. Polish the painted contact part using a grinder to expose the metal face.	
7	The contact part of jig and welding work piece should be free from unevenness due to influence of burn through, spatter, or aging deterioration.	Polish the surface of the jig using a grinder so that the welding workpiece and the jig can fully contact each other.	
8	The mixing ratio of shielding gas should be adequate.	CO_2High CO_2- concentration could increase the spatter generation. For shield gas, follow the mixing ratio as follows: CO_2gas : Carbon dioxide (CO_2) 100 % MAG gas : Argon (Ar) 80 % + Carbon dioxide (CO_2) 20 % : Argon (Ar) 90 % + Carbon dioxide (CO_2) 10 % MIG gas : Argon (Ar) 97.5 % + Carbon oxygen (CO_2) 2.5 % MIG gas (Stainless) : Argon (Ar) 98 % + Oxygen (O_2) 2 % MIG gas (Aluminum/ Aluminum bronze /Silicon bronze) : Argon (Ar) 100 %	
9	The shielding gas should be correctly mixed.	Use a mixer. If welding is unstable, use pre-mix gas to check if the welding condition is improved.	
10	The flow rate of shielding gas should be adequate.	Ensure the adequate shield gas flow rate as follows: CO_2/MAG gas : 10 to 25L/min MIG gas : 15 to 25L/min	
11	When the shield gas is mixed, each gas pressure should be the same.	Set pressures of the respective gas to the same level.	
12	Oil or other dirt should not be adhered on the welding wire.	Consider a measure to wipe off the dirt.	
13	In the CO_2- and MAG welding, the particle diameter of wire tip at the welding completion should not excessively be large or small.	Adjust anti-stick voltage so that the wire tip particle size becomes 1.2 to 1.5 times of the wire diameter. If the particle size is smaller than the above, set the anti-stick voltage to a higher value, whereas if the particle size is larger than the above, set the anti-stick voltage to a lower value.	
14	At start point of welding, the tip of welding wire and the welding workpiece should not be contacted. (When using a robot, operate several times with "welding OFF" and confirm that the welding wire and the welding workpiece do not contact each other.)	If the wire tip contacts with the welding workpiece, set anti-stick voltage to a higher value to increase meltage of the welding wire at the end of welding. If anti-stick voltage is set to a value higher than the appropriate range, the wire tip particle size becomes excessively large, resulting in poor start performance of the next welding.	
15	The tip of the welding torch should not be worn.	Visually check the hole diameter of the tip. If it is 1.2 times or larger than the hole diameter of a new tip, or when the tip is discolored, replace it with a new one.	
16	In wire feeding, pressure roll should not be idled and the wire reel should rotate smoothly.	Adjust the pressure level of wire feeder. If it is not improved, check for other factor that generates overload on wire feeding. (☞ See parameter 12, 17, 18)	
17	The groove of feed roll should not be dirty.	Clean the dirty groove with a wiry tool.	

	Check parameter	Countermeasures	Check
18	There should be no large feeding resistance of wire. (With the pressurized holder of the wire feeder held up, hold the tip of welding wire with a plier, and try pulling it out; if smoothly pulled out, it is adequate.)	Ensure that the torch cable has no bending at a sharp angle. If the liner is clogged with dirt or when inched wire has flaw, replace the liner with a new one. (In replacing the liner, follow the precautions on the attached manual of welding torch for appropriate handling.) In cutting the liner, take care for the followings: If the liner is too long: feeding resistance increases, resulting in shorter life of wire feeder. If the liner is too short: feeding failure occurs.	

5.3 Power ON and Gas Supply

This section explains how to supply power and shield gas.

⚠ WARNING

- **Handle the gas cylinder according to the related laws or regulations as well as the internal standard of the customer.**
  Note that the gas cylinder contains a high-pressure gas. Wrong operation may cause gas explosion, resulting in serious physical injury.
- **In opening the valve of gas cylinder, keep your face away from the gas discharge port.**
  If the connection should be loose, high-pressure gas may burst out.
- **Keep your hands, fingers, hairs, and clothes away from the rotating cooling fan and theopen parts around the cooling fan.**
  it could result in entanglement with the internal fan.

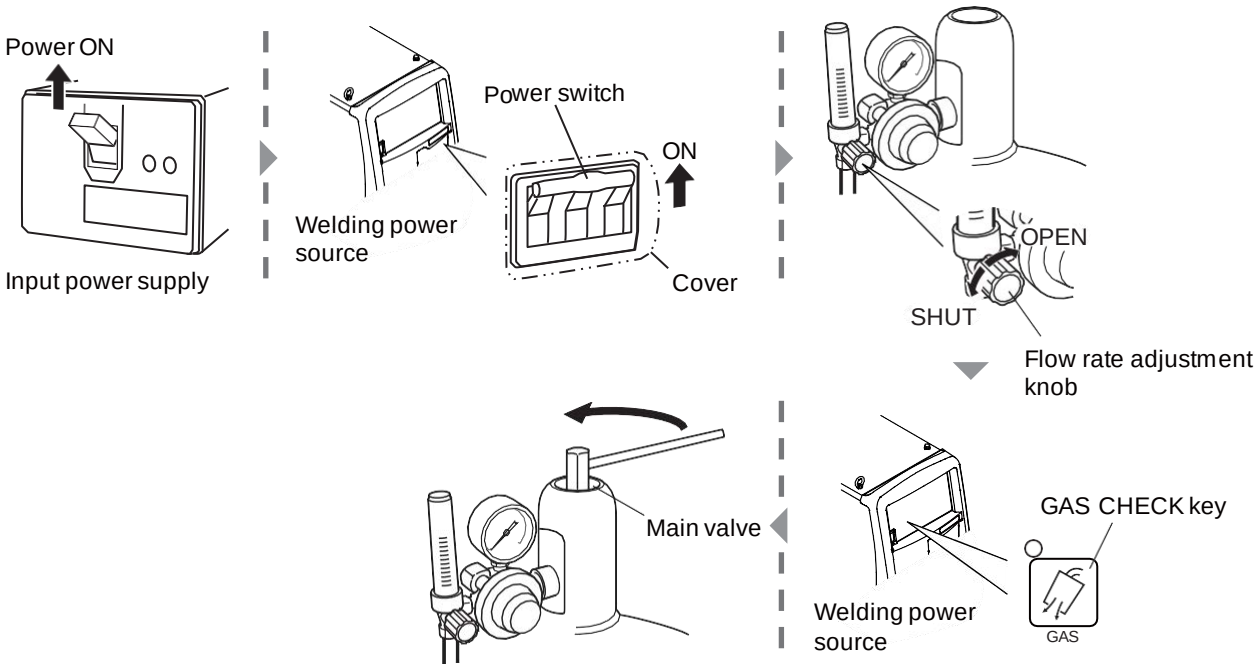

STEP

1. **Supply the input power.**
   - Operate the disconnect switch to supply the input power.
   - * The power LED switch lights up.

2. **Turn ON the power switch of the welding power supply.**
3. **Check that the flow rate adjustment knob is set to "SHUT", and press the GAS CHECK key.**
   * The LED of the GAS CHECK key lights up, turning to the gas check status (shield gas is discharged).
   * The gas check status continues for approximately 2 minutes, and automatically stops. To stop the gas check during the sequence, press the GAS CHECK key again to turn off the LED light.
4. **Open the main tap of shield gas.**
   - When the gas regulator is equipped with a pressure gauge, open the main tap by checking the pressure gauge until the appropriate pressure is obtained.
5. **Turn the flow rate adjustment knob to "OPEN" and adjust the flow rate of shield gas.**
6. **Press the GAS CHECK key.**
   * The LED of the GAS CHECK key lights off, to stop gas check.

5.4 Wire Inching

This section explains the inching operation (feeding operation) of the wire.

⚠ WARNING

- **Do not look into the tip of the welding torch during the inching operation. Do not bring the tip of the welding torch to face, eyes, or body.**
  The wire may abruptly burst out, resulting in an injury.
- **Keep hands, fingers, hair and clothes away from the feed roll of the wire feeder.**
  It may cause an entanglement.

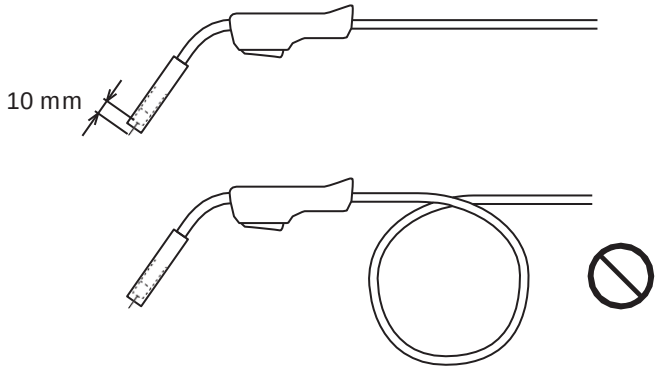

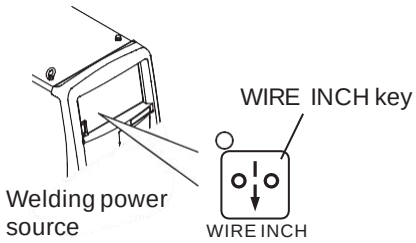

STEP

1. **Straighten the torch cable.**
   * Bent cable may cause feeding failure of the wire or wire bending.
2. **Press the WIRE INCH key to feed the wire.**
   - Keep pressing the WIRE INCH key until the wire protrudes from the end of the tip in approximately 10 mm. Releasing the WIRE INCH key will stop the wire feeding. For excessive wire, cut the wire using a plier.
   * Turning the parameter adjusting knob during the wire feeding can adjust the feed speed.

TIPS

- Wire feeding is also enabled by a remote control (optional). Turning the welding current adjustment knob can adjust the feed speed. (☞ 6.8 Operation of Analog Remote Control (Optional))

5.5 Check and Setting of Welding Condition

This section explains how to check the welding condition as well as how to prevent erroneous operation on the operation panel (Erroneous operation prevention function).

5.5.1 Reading welding condition

Before starting the welding operation, it is necessary to set the welding conditions (such as welding current / voltage, type of shield gas, and wire type / wire diameter). (☞ 6.4 Preparing Welding Conditions)

When the welding conditions are registered to memory, it can be read out. (☞ 6.5 Memory Function of Welding Conditions)
When the condition is read, confirm that the welding conditions are correct.

5.5.2 Preventing erroneous operation on operation panel

This section explains how to prevent erroneous operation on the operation panel.
To prevent accidental change of the welding conditions, the erroneous operation prevention function is equipped for the operations other than inching, gas check, or reading / saving of the welding condition. In using the analog remote control, however, the adjustment of current /voltage by the analog remote control is available.

The erroneous operation prevention function does not need any password to release the lock. To allow only selected personnel to change the welding conditions, use the protection function of the welding conditions which requires a password. (☞ 7.1 Protection of Welding Conditions)

5.5.2.1 Activating erroneous operation prevention function

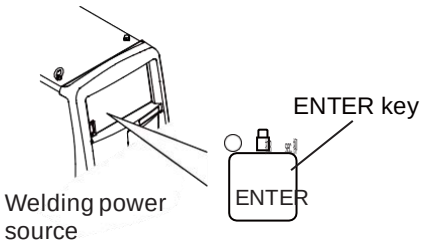

STEP

1. **Press and hold the ENTER key for approximately three seconds or more.**

   * When the erroneous operation prevention function is activated, the LED of the ENTER key flashes.

5.5.2.2 Deactivating erroneous operation prevention function

STEP

1. **Press and hold the ENTER key for approximately three seconds or more again.**
   * The LED of the ENTER key lights off, which deactivates the erroneous operation prevention function.

TIPS

- **Turning the power switch OFF does not deactivate the erroneous operation prevention function.**
- **Initializing the welding condition and the internal function deactivates the erroneous operation prevention function.**
  (☞ 7.4 Initializing Welding Conditions and Internal Functions)

5.6 Performing Welding Operation

This section explains the procedure from the start to the end of the welding operation.

5.6.1 Operation of welding start

⚠ CAUTION

- **In using the welding power source for TIG welding, prepare a welding torch for TIG welding by the customer.**
- **Perform the switch operation to TIG welding by the WELDING METHOD key when the torch electrode is not contacted with the base metal.**

STEP

1. **Check that the welding conditions are correctly set and operate the torch switch to start the welding.** (☞ 6.6.3 Crater setting)
   - During the welding, the welding current is displayed on the left digital meter and the welding voltage is displayed on the right digital meter both in a real time basis. This indication is the average value of the output per approximately one second.
   - In TIG welding, arc start requires contact of the torch electrode with the base metal.
   - In DC STICK welding, arc start requires setting of the welding electrode in the electrode holder and contact of the electrode with the base metal.
2. **A series of welding operation is completed by the torch switch operation.** (☞ 6.6.3 Crater setting)
   - At the end of welding, the average value of the welding current and the welding voltage at the last second of the welding sequence is displayed on each digital meter in a flashing mode. (except for the output at crater-filler)
   * Pressing any key on the operation panel during the flashing display will change the indication to the set value.
   * The duration of flashing display can be changed by the internal function (F8).
   * When the welding time is short such as in the tuck welding, accurate value may not be displayed.

TIPS

- **The displayed average value is processed by the software. Note that the value cannot be guaranteed as the control data for a measurement instrument.**

5.6.2 Operation during welding

This section explains the operation requiring adjustment of welding current / voltage during the welding. The welding current /voltage can be adjusted during each sequence such as welding under initial condition, welding condition, or crater condition.

TIPS

- **When the analog remote control (optional) is connected, the welding current/voltage under the welding condition cannot be adjusted on the operation panel. Adjust the welding current/voltage for the welding condition at the analog remote control.**

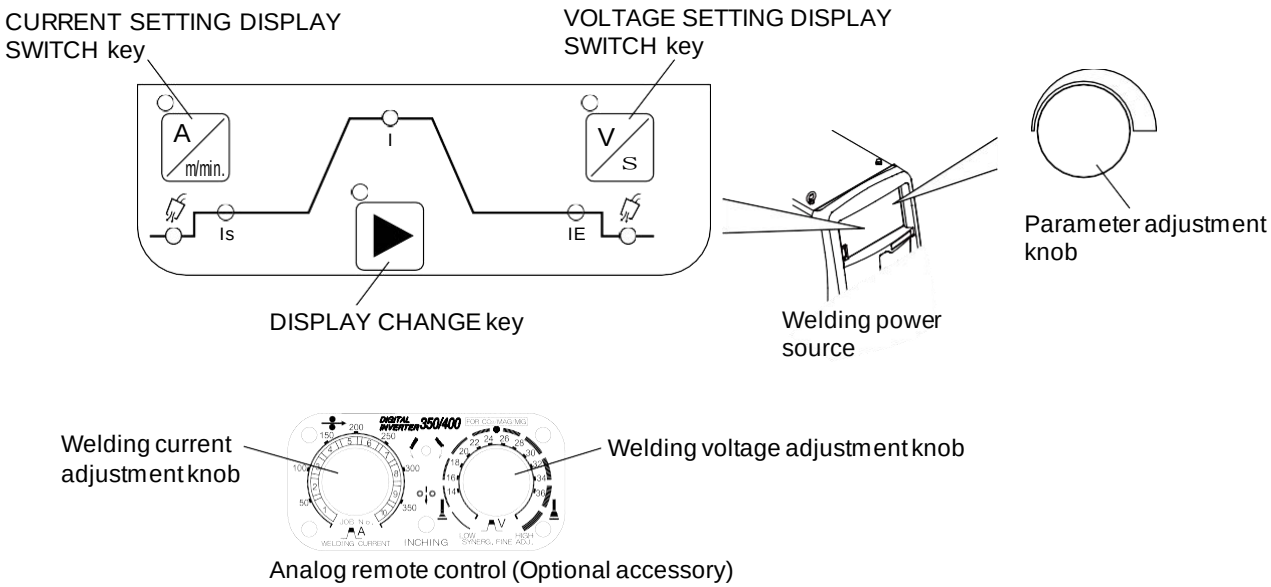

STEP

1. **Press the DISPLAY CHANGE key.**

   * The displays of the left /right digital meter switches to the set values.

2. **Adjust the welding current.**

   - When the LED of the CURRENT SETTING DISPLAY SWITCH key is off, press the CURRENT SETTING DISPLAY SWITCH key to light up the LED. (In the adjustment by the remote control, this operation is not necessary.)
   - Turn the parameter adjustment knob (for the remote control, the welding current adjustment knob) to adjust the welding current.

3. **Adjust the welding voltage.**

   - When the LED of the VOLTAGE SETTING DISPLAY SWITCH key is off, press the VOLTAGE SETTING DISPLAY SWITCH key to light up the LED. (In the adjustment by the remote control, this operation is not necessary.)
   - Turn the parameter adjustment knob (for the remote control, the welding voltage adjustment knob) to adjust the welding voltage.

4. **Press the DISPLAY CHANGE key.**

* The displays on the left/right digital meters return to the display of current /voltage in welding.

TIPS

- When no operation is performed for approximately 5 seconds, the display will return to the one showing current/voltage in welding.
- Using the internal function (F48) enables to increase/decrease the welding current by the torch switch operation. (It is available only with the crater set to on and in the welding condition.) (☞ 6.7 Setting Internal Functions)
- When the LED of the VOLT. ADJUST key is lit (CONSTANT penetration), the voltage is automatically set to the value according to the current. (☞ 6.6.2.2 Welding parameter setting)

5.6.3 Operation at welding end

This section explains the supply stop procedure of power/shield gas after the welding end.

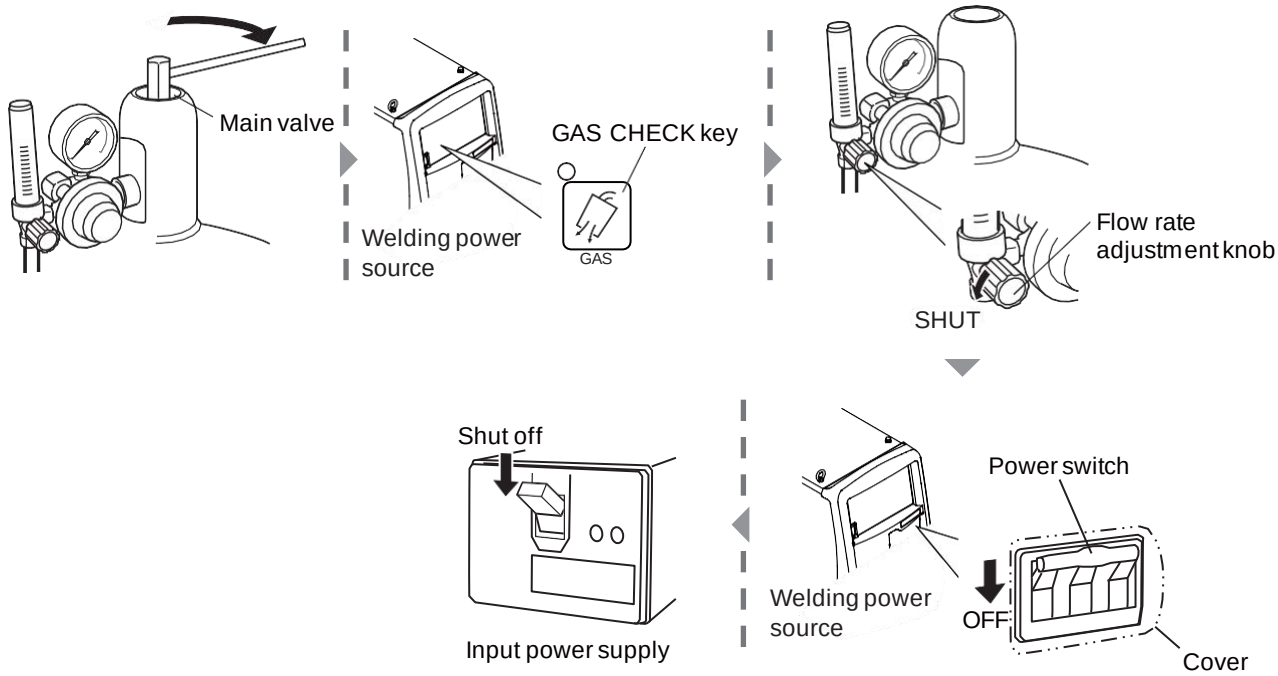

STEP

1. **Close the main tap of the shield gas.**
2. **Press the GAS CHECK key.**
   * The LED of the GAS CHECK key lights up, and the shield gas remained in the gas piping is discharged.
3. **After the shield gas is discharged, press the GAS CHECK key.**
   * The LED of the GAS CHECK key lights off, to stop gas check.
4. **Set the flow adjustment knob to “SHUT", to adjust the shield gas flow rate to zero.**
5. **Turn OFF the power switch of the welding power supply.**
   * The power LED switch lights off.
6. **Shut off the input power.**
   - Operate the disconnect switch to shut off the input power.

Chapter 6 Welding Condition

This chapter explains the functions on the operation panel as well as how to set the welding conditions.

6.1 List of Welding Conditions

This section explains the parameters/functions settable in the welding power source.

6.1.1 Parameter (Welding parameter)

Parameter		Set Range	Initial Value	Descriptions
Pre-flow time		0 to 10 sec	0.1 sec	Set the gas discharge time before welding starts.
Initialized condition/ Main condition/ Crater condition	Current	20 to 400 A 10 to 400 A (for TIG welding) 20 to 300 A (for DC STICK welding)	150 A	Initial Condition: set the current and voltage value soon after the welding. Welding condition: set the current and voltage value during the welding. Crater condition: set the current and voltage value at the end of welding.
	Voltage (INDIVIDUAL)	12.0 to 38.0 V	19.0 V	
	Voltage (SYNERGY)	-100 to 100	0	
Post-flow time		0 to 10 sec	0.4 sec	Set the gas discharge time after the welding ends.
Arc spot time		0.1 to 10 sec	3 sec	Set the welding time at arc spot.
Arc characteristics		-99 to 99	0	Set the arc to the condition from soft to hard.
Welding condition memory No.		1 to 100	1	Register the welding conditions (storable up to 100).

6.1.2 Function

Function	Initial value	Setting parameter
CRATER-FILL	CRATER-FILL-OFF	CRATER-FILL-OFF / CRATER-FILL-ON / CRATER-FILL-ON (PEPEATED) / ARC SPOT
GAS	MAG (20% CO_2)	MAG (20% CO_2) / MAG (10% CO_2) / MIG (2% O_2)/MIG (2.5% CO_2)/ MIG (100% Ar)
WIRE MATERIALS	G3Si1	G3Si1 / G3Si1 (Fill) / CrNi / CrNi (Ferr) / CrNi (Fill) / Cu Si / Cu Al / Al/99 / Al/Mg
WELDING METHOD	DC LOW SPATTER	DC / DC LOW SPATTER / DC TIG / DC STICK
WIRE DIA.(mm)	1.2	0.8/0.9/1.0/1.2/1.4/1.6
INITIAL CONDITION	OFF	ON/OFF
VOLT. ADJUST	INDIV.	SYN. / INDIV.
CONSTANT PENETRATION	OFF	ON/OFF

6.1.3 Internal function

Details of internal function (☞ 6.7 Setting Internal Functions)
The functions with circle mark (O) on the Memory row can be stored with the welding conditions.

No.	Function Name	Setting range	Initial value	Explanation	Memory
F1	Standard/Extended cable mode	OFF/ON	OFF	Sets the waveform control mode for voltage detection when using the welding power source in the STANDARD mode. OFF: STANDARD mode (standard mode) ON: Extended cable mode (extended mode of power cable)	-
F2 F3	No function	OFF (fixed)	OFF	No functions are provided.	-
F4	Auto/Semi-auto mode	0/1/2/3/4	0	Switches the I/O settings of the welding power source: 0: Semi-automatic machine 1: Automatic machine 1 2: Automatic machine 2	-
F5	Maximum external command voltage	10.0/14.0/15.0	15.0 (V)	Sets the maximum value of voltage supplied when current/voltage command is externally input.	-
F6	Up slope time	0.0 to 10.0	0.0 (s)	Sets the slope time from the initial condition to the welding condition.	○
F7	Down slope time	0.0 to 10.0	0.0 (s)	Sets the slope time from the welding condition to the crater condition.	○
F8	Welding result display time	0 to 60	20 (s)	Sets the display time for the current/voltage after completion of welding.	-
F9	Analog remote control scale	200/350	350 (A)	Configures the settings of scale plate of the analog remote control.	-
F10	Motor over current detection level	20 to 150	70 (%)	Sets the over current warning level for the rated current of the wire feed motor.	-
F11	Fine adjustment of welding conditions memory	OFF/1 to 30	OFF	Allows fine tuning the current and voltage of welding conditions stored on the memory using the analog remote control. OFF: No fine adjustment 1 to 30 (%): Fine adjustment is performed (Maximum adjustment range at this time can be set in percentage)	-
F12	Operation time of water-cooled pump	20 to 60/ON	20 (min)	Sets the operation time of water-cooled pump after welding ends. Set the time in the range of 20 to 60 minutes or set to ON (always ON).	-
F13	Turbo start	OFF/ON	ON	Sets the turbo start function:OFF: ineffectiveON: effective	-
F14	Start control time adjustment	-50 to 50	0 (%)	Adjusts the control time of current at the time of start.	-
F15	Start control current adjustment	-100 to 100	0 (A)	Adjusts the control of current at the time of start.	-
F16	Slow-down speed adjustment	-1.0 to 1.0	0.0 (m/min)	Adjusts slowdown speed.	○
F17	Anti-stick time adjustment	-50 to 50	0 (10ms)	Allows fine tuning meltage of the wire at the end of welding based on the anti-stick process time.	○
F18	Anti-stick voltage adjustment	-9.9 to 9.9	0.0 (V)	Allows fine tuning meltage of the wire at the end of welding based on the anti-stick process voltage.	○

No.	Function Name	Setting range	Initial value	Explanation	Memory
F19	Alarm setting switching	OFF/ON	OFF	Sets the output status when an error of the alarm level is detected: OFF: Ineffective ON: Stops the output	-
F20	Low input voltage detection level	260 to 400	320 (V)	Adjusts the low primary input voltage detection level.	-
F21	Maximum cooling fan operation	OFF/ON	OFF	Sets the operation mode of cooling fan: OFF: Economical operation ON: Rotates the fan at maximum speed at all time	-
F22	Operation sound switching	OFF/ON	ON	Sets the operation sound when any key is pressed on the operation panel: OFF: Turns off the sound ON: Turns on the sound	-
F23	Sleep mode switching time	0 to 10	0	Sets the time until the welding power source enters into sleep mode: 0: OFF 1 to 10: 1 min to 10 min	-
F24	Wire feeding speed setting	OFF/ON	OFF	Sets the criteria for welding condition: OFF: based on current ON: based on wire feeding speed	-
F25	External output 1 setting	0	0	Used when connecting with automatic machine made by other manufacturer.	-
F26	External output 2 setting				
F27	External output 3 setting				
F28	External output 4 setting				
F29	External input 1 setting	0 to 9	0	Sets the functions of input terminal of the programmable I/O.	-
F30	External input 2 setting		0		
F31	External input 3 setting		0		
F32	External input 4 setting		0		
F33	Inhibition ratio display for [squeeze] detection	-	-	When F33 is selected, the [Squeeze] detection inhibition ratio (%) is displayed on the right digital meter.This function is not configurable.	-
F34	Automatic correction of [squeeze] detection sensitivity	OFF/ON	ON	Sets ON/OFF of the automatic correction function of the [Squeeze] detection sensitivity: OFF: No automatic correction ON: With automatic correction	○
F35	Saving [squeeze] detection sensitivity	OFF/ON	OFF	Sets whether to save the [Squeeze] detection sensitivity at completion of welding: OFF: Not to save ON: To save until the next welding starts	○
F36	Spatter control P1P	-100 to +100	0	Sets the control parameters for spatter control.	○
F37	Spatter control P2P				
F38	Arc voltage direct detection switching	OFF/ON	OFF	Sets the voltage direct detecting terminal on the base metal side of the welding power source and voltage detection terminal of the wire feeder. OFF: ineffective ON: effective	-
F39	Current display adjustment (GAIN)	-20 to 20	0 (%)	Adjusts the current values displayed on the digital meter.	-
F40	Current display adjustment (OFFSET)	-20 to 20	0 (A)		
F41	Voltage display adjustment (GAIN)	-20 to 20	0 (%)	Adjusts the voltage values displayed on the digital meter.	-
F42	Voltage display adjustment (OFFSET)	-2.0 to 2.0	0.0 (V)		
F43	CAN ID	1 to 16	1	Sets CAN ID numbers to be used in the PC monitoring system, etc.	-

No.	Function Name	Setting range	Initial value	Explanation	Memory
F44	Reading welding conditions with remote control	OFF/ON	OFF	Sets whether to read "1" to "10" of the welding conditions stored on the memory via the analog remote control: OFF: Not to read ON: Reads	-
F45	Special crater sequence	OFF/ON	OFF	Sets the initial condition and crater condition as applied for a fixed period of time regardless of the torch switch operation: OFF: Not applied ON: Applied (Time set by F46 and F47 is applied)	○
F46	Special crater sequence initial time	0.0 to 10.0	0.0 (s)	Sets initial time in the special crater sequence. (available when "ON" is selected in F45)	○
F47	Special crater sequence crater time	0.0 to 10.0	0.0 (s)	Sets crater time in the special crater sequence. (available when F45 is enabled)	○
F48	Adjusting current with torch switch	OFF/ON	OFF	With the setting of "Crater" and in the welding condition (during start input holding), sets whether to adjust current by the torch switch operation: OFF: not to use torch switch ON: uses torch switch (increase/decrease volume set by F49 and F50 are applied).	○
F49	Current increase and decrease by single-clicking	-50 to 50	0 (A)	Sets current increase/decrease volume by single clicking of the torch switch. (available when "ON" is selected in F48)	○
F50	Current increase and decrease by double-clicking	-50 to 50	0 (A)	Sets current increase/decrease volume by double clicking of the torch switch. (available when "ON" is selected in F48)	○
F51	Special crater repeat	OFF/ON	OFF	With the setting of "Crater," sets whether to switch the welding condition and crater condition by the click operation of the torch switch: OFF: not to use torch switch ON: uses the torch switch	○
F52	Data type of data log function	0 to 8	0	Sets sample data on the data log: 0: No sampling 1: Welding current / Welding voltage / Sequence information 2: Current command / Voltage command / Feeding command 3: Current command / Welding current / Welding voltage 4: Current command / Welding current/ Sequence information 5: Welding current / Voltage command / Welding voltage 6: Voltage command / Welding voltage / Sequence information 7: Welding current / Feeding command/ Sequence information 8: Welding voltage / Feeding command / Sequence information	-
F53	Sampling speed of data log function	1/2/3	1	Sets sampling interval of the data log function: 1: 10ms 2: 100ms 3: 1s	-
F54	Tack start process	OFF/ON	OFF	Sets whether to feed the wire with the slowdown speed at the time of welding start: OFF: Feeds with slow down speed ON: Feeds without slow down speed	-

No.	Function Name	Setting range	Initial value	Explanation	Memory
F55	Arc loss detection time	OFF (fixed)	OFF	Used when connecting with GeKaMac automaticmachine.	-
F56	Arc start error detection time				
F57	WCR output ON delay time				
F58	WCR output OFF delay time				
F59	Analog setting switch	OFF (fixed)	OFF	No functions are provided.	-
F60	No function				
F61					
F62					
F63					
F64					
F65					
F66					
F67	Setting change of current value (initial condition, crater condition)	OFF/ON	OFF	When "CRATER ON" is selected, sets the current value of the initial condition and crater condition in the percentage based on the current value of the welding condition. OFF: invalid ON: settable with percentage	-
F68	Setting of current value (initial condition)	10 to 300	100 (%)	Sets the current value of the initial condition in the percentage based on the current value of the welding condition.	-
F69	Setting of current value (crater condition)	10 to 300	100 (%)	Sets the current value of the crater condition in the percentage based on the current value of the welding condition.	-
F77	Welding power source identification numbers	1 to 999	1	Sets welding power source identification numbers of Welding result control function.	-

6.2 Function on Operation Panel

This section explains the function of displays and keys arranged on the operation panel.

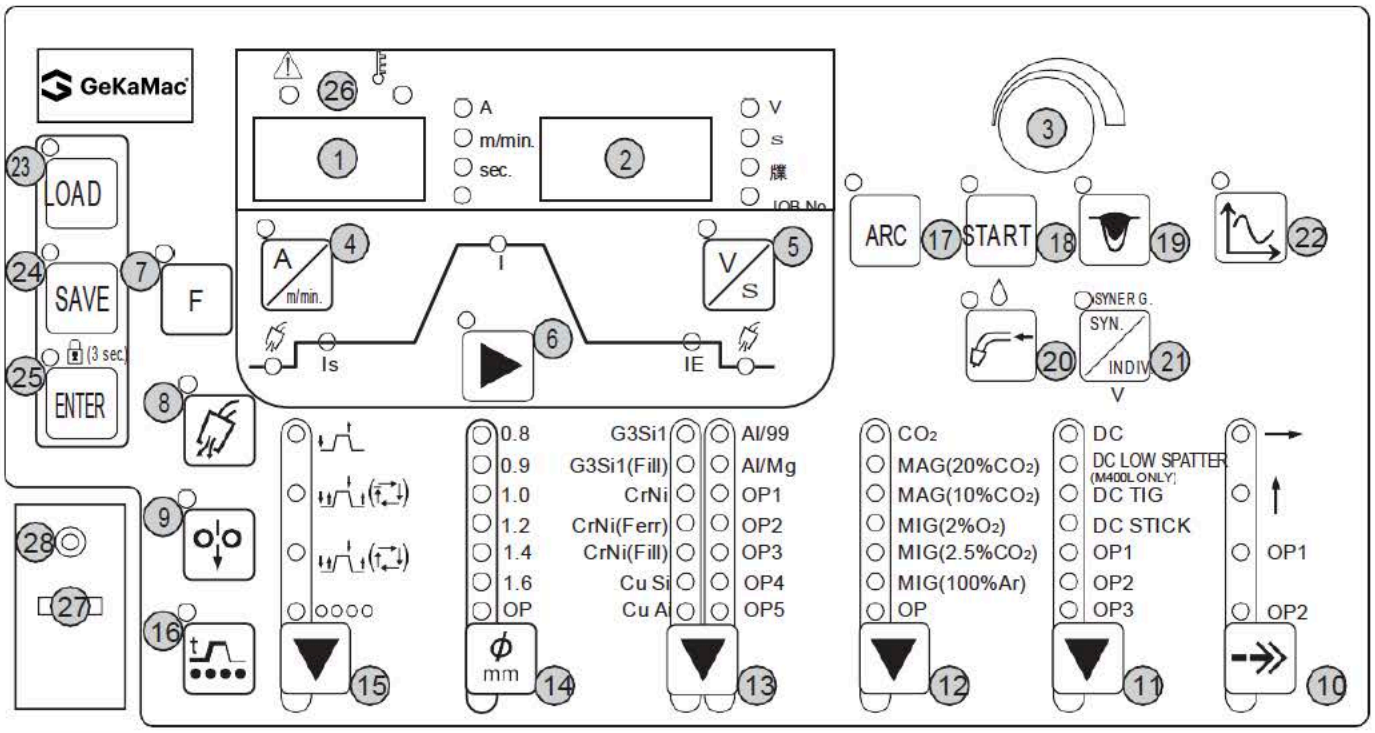

No.	Name	Function
1	Left digital meter	Displays various information. • The welding current is displayed in welding, and the LED of "A" lights up. • In each setting, corresponding setting values are displayed, and the LED lit position automatically switches.
2	Right digital meter	Displays various information. • The welding voltage is displayed in welding. • In each setting, corresponding setting values are displayed, and the LED lit position automatically switches.
3	Parameter adjustment knob	Adjusts each parameter value such as welding current/voltage, and wire feed speed.
4	CURRENT SETTING DISPLAY SWITCH key	Sets welding current/wire feed speed. The value in setting is displayed on the left digital meter, which can be adjusted by the parameter adjustment knob. Switching the mode is enabled by pressing the key.
5	VOLTAGE SETTING DISPLAY SWITCH key	Set the welding voltage. The value in setting is displayed on the right digital meter, which can be adjusted by the parameter adjustment knob. When the SYNERGIC mode is selected for the adjustment mode of welding voltage, pressing this key can switch the value displayed on the right digital meter between "fine adjustment value" and "actual voltage value". (In the SYNERGIC mode, the welding voltage according to the welding current is regarded as ±0, based on which the welding voltage is finely adjusted.)
6	DISPLAY CHANGE SWITCH key	Switches the welding sequence as the set target. During the welding, the display can be switched to display the value set as the welding condition.
7	F (function) key	Sets the internal function of welding power source. (☞ 6.7 Setting Internal Functions) Pressing this key for a second or more lights up the LED, and the sequence transits to the Internal Function Setting mode.
8	GAS CHECK key	Discharges the shield gas. (☞ 5.3 Power ON and Gas Supply) Pressing this key makes the LED lit, allowing the shield gas to be discharged. After discharging the gas for approximately 2 minutes automatically stops the discharge. Pressing this key again lights off the LED, stopping the shield gas discharge.
9	WIRE INCH key	Feeds the wire. (☞ 5.4 Wire Inching) The LED lights during when the key is pressing, allowing the wire to be fed. The feeding speed can be adjusted by the parameter adjustment knob. When the analog remote control (optional) is connected, the speed can be adjusted by the welding current setting knob.

No.	Name	Function
10	TRAVEL SPEED key	Select the TRAVEL SPEED to apply. (*1) • The LED of the parameter in selection lights up. • Some option is invalid depending on the combination of the wire diameter, wire material, gas and the welding method. Selecting such invalid option makes the LED flash. (☞ 6.6.1 Welding mode setting)
11	WELDING METHOD key	Select the type of welding method. (*1) • The LED of the parameter in selection lights up. • Some welding method is invalid depending on the combination of the wire diameter, wire material, TRAVEL SPEED, and gas. Selecting such invalid option makes the LED flash. (☞ 6.6.1 Welding mode setting)
12	GAS key	Select the gas to use. (*1) • The LED of the parameter in selection lights up. • Some gas cannot be used depending on the combination of the wire diameter, wire material, TRAVEL SPEED and the welding method. When the gas which cannot be used is selected, the LED flashes. (☞ 6.6.1 Welding mode setting)
13	WIRE MATERIALS key	Select the wire material to use. (*1) • The LED of the parameter in selection lights up. • Some wire material cannot be used depending on the combination of the gas, wire diameter, TRAVEL SPEED, gas and the welding method. When the wire material which cannot be used is selected, the LED flashes. (☞ 6.6.1 Welding mode setting)
14	WIRE DIA. (mm) key	Select the wire diameter to use. (*1) • The LED of the parameter in selection lights up. • Some wire diameter cannot be used depending on the combination of the gas, wire diameter, TRAVEL SPEED, and the welding method. When the wire diameter which cannot be used is selected, the LED flashes. (☞ 6.6.1 Welding mode setting)
15	CRATER-FILL key	Select the crater treatment method or arc spot at the end of welding. The LED of the parameter in selection lights up. • For details of the crater treatment (☞ 6.6.3 Crater setting) • For details of arc spot (☞ 6.6.4 Arc spot time)
16	SPOT TIME key	Sets the welding time when "ARC SPOT" is selected by the CRATER-FILL key. (☞ 6.6.4 Arc spot time) Pressing this key makes the LED lit, enabling to adjust the welding time by the parameter adjustment knob. The set time is displayed on the left digital meter.
17	ARC CONTROL key	Set the arc characteristics (soft to hard). (☞ 6.6.6 Arc characteristics adjustment) Pressing this key makes the LED lit, enabling to adjust the arc characteristics by the parameter adjustment knob. The arc characteristic in adjustment is displayed on the right digital meter.
18	INITIAL CONDITION key	When "CRATER-FILL ON" is selected by the CRATER-FILL key, the sequence of initial condition is added before the welding. (☞ 6.6.3 Crater setting) Pressing this key makes the LED lit, adding the sequence of initial condition.
19	CONSTANT PENETRATION key	Activates the penetration control. (☞ 6.6.7 Penetration control adjustment) Press this key makes the LED lit, and automatically adjusts the wire feed speed so that the welding current becomes always constant even with the wire feeding length changed. This function is available only when the "MILD STEEL CORED", "MILD FLUX CORED", "SUS SOLID" or "SUS FLUX CORED" is selected by the WIRE DIA. (mm) key.
20	TORCH key	Select air-cooled welding torch or water-cooled welding torch to be used. Switching the mode is enabled by pressing the key. • When the LED is ON: water-cooled welding torch mode • When the LED is OFF: air-cooled welding torch mode

No.	Name	Function
21	VOLT.ADJUST key	Sets welding voltage. Switching the mode is enabled by pressing the key. • When the LED of the VOLT. ADJUST key is on: SYNERGIC mode. (The welding voltage is automatically set according to the set welding current. To fine-tune welding voltage, adjust the synergic fine adjustment knob.) • When the LED of the VOLT. ADJUST key is off: INDIVIDUAL mode. (In the individual adjustment setting, welding current and welding voltage are adjusted respectively.)
22	WELD MONITOR key	Sets welding control function. (See Chapter 7 Administrator Functions.) Pressing this key for a second or more lights up the LED, and the sequence transits to the welding control mode.
23	LOAD key	Reads the registered welding condition from the internal memory. (☞ 6.5 Memory Function of Welding Conditions)
24	SAVE key	Registers the set welding condition in the internal memory. (☞ 6.5 Memory Function of Welding Conditions)
25	ENTER key	Carries out the administrative functions such as key lock, password, and registration of welding condition to the memory. Depressing the key for three seconds or more makes the LED lit, enabling the key lock function.
26	WARNING/Temperature LED	Lights up or flashes when any failure or abnormal condition occurs in the welding power source. (☞ 9.1 Action in Case of Error)
27	USB connector	For variety of registered data, writes to or reads from the USB memory. (☞ Chapter 7 Administrator Functions)
28	Terminals for service use	Terminals for the Gedik Welding service use.

*1: Selective options can be optionally available (OP).

6.3 Welding Conditions

This section explains basic welding conditions with useful functions.

6.3.1 Basic welding conditions

This section explains the basic welding conditions. To carry out the welding operation, the followings should be considered:

- Plate thickness and materials of welding material
- Type and flow rate of shield gas
- Wire type and wire diameter, and welding method (type of welding)
- Welding current and welding voltage

6.3.2 Useful functions

This section explains the useful functions for the welding power source.

- Registration of welding conditions (☞ 6.5 Memory Function of Welding Conditions)
  Using the memory function of the welding condition enables to register the welding current /voltage, shield gas type, and wire type /wire diameter currently set, and reads them out for use.
- Synergic adjustment of voltage (☞ 6.2 Function on Operation Panel)
  Using the VOLT.ADJUST key enables to automatically set the welding voltage according to the welding current. Fine adjustment of the welding voltage automatically set is also available.

- Penetration control (☞ 6.6.7 Penetration control adjustment)
  Using the penetration control function can automatically adjust the wire feed speed so that the constant welding current is always kept even with the wire feeding length changes. (Available only for MILD STEEL SOLID, MILD STEEL CORED, STAINLESS STEEL SOLID or STAINLESS STEEL CORED)
- Welding current adjustment by torch switch (☞ 6.7 Setting Internal Functions)
  Using the internal function (F48) enables to increase or decrease the welding current set by the torch switch operation. (Available only with the CRATER-FILL ON is selected and with welding condition)

6.4 Preparing Welding Conditions

This section explains the setting process of basic welding conditions.

Check welding material suitable for the welding condition	(☞ 10.3 Materials for Setting Welding Conditions)
↓	
Setting wire material, shield gas, and TRAVEL SPEED	(☞ 6.6.1 Welding mode setting)
↓	
Setting wire diameter	(☞ 6.6.1 Welding mode setting)
↓	
Setting crater treatment	(☞ 6.6.3 Crater setting)
↓	
Setting pre-flow (Setting gas discharge time)	(☞ 6.6.2 Setting welding parameter)
↓	
Setting initial condition (Setting welding current/voltage)	(☞ 6.6.2 Setting welding parameter)
↓	
Setting welding condition (Setting welding current/voltage)	(☞ 6.6.2 Setting welding parameter)
↓	
Setting crater condition (Setting welding current/voltage)	(☞ 6.6.2 Setting welding parameter, 6.6.3 Crater setting)
↓	
Setting post-flow (Setting gas discharge time)	(☞ 6.6.2 Setting welding parameter)
↓	
Registering the welding conditions set above as necessary	(☞ 6.5 Memory Function of Welding Conditions)

6.5 Memory Function of Welding Conditions

This section explains the memory function of welding conditions.
The welding power source is equipped with the function to register the welding conditions and reads them out for use. The number of welding conditions that are able to be registered are 100 at maximum. Single welding condition can contain the following information at registration:

- Welding mode selected by the keys on operation panel (Shield gas /Wire /Crater /Penetration control, etc.)
- Welding current/voltage for each welding sequence (☞ 6.6.2 Setting welding parameter)
- Part of internal function (☞ 6.1.3 Internal function)

⚠ CAUTION

- The welding conditions (electronic data) stored by this function are susceptible to occurrence of static electricity, impact, repair, etc., and there is a possibility that the stored contents may be changed or lost. BE SURE TO MAKE A COPY FOR IMPORTANT DATA.
- Please note that Gedik Welding will not be liable for any alteration or loss of electronic information.

NOTE

- When the analog remote control is connected to the machine, even if the stored welding condition is read, the set values of the analog remote control apply to the welding current and welding voltage of welding condition.

TIPS

- Use of the internal function (F44) enables to read out the registered welding condition by the analog remote control (optional). (☞ 6.7 Setting Internal Functions)
- Use of the internal function (F11) enables to finely adjust the current/voltage values read out from the memory by the analog remote control (optional). (☞ 6.7 Setting Internal Functions)

6.5.1 Memory registration of welding conditions

This section explains how to register the current welding condition set on the operation panel to the memory.

STEP

1. **Press the SAVE key.**

   * The system transits to the storage function mode and the LED of the SAVE key lights up.
   * The JOB No. (registration No.) is displayed on the right digital meter in a flashing mode, and the LED of JOB No. lights up.
   * On the left digital meter, the setting value of the welding current registered to the JOB No. if any is displayed (if there is no registration, "- - -" is displayed), and the "A" LED lights up.

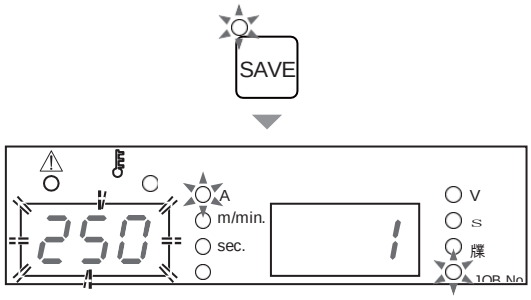

2. **Turn the parameter adjustment knob, and select the JOB No.**

   * When there is no registration data on the selected JOB No., "- - -" is displayed on the left digital meter.
   * When there is any registration data on the selected JOB No., the setting value of the welding current is displayed on the left digital meter. At this time, the LEDs for the keys of crater or wire material also light up.

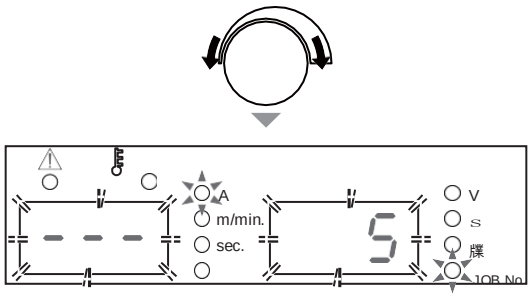

3. Press the ENTER key.

* The LED of ENTER key flashes.
* Pressing the DISPLAY CHANGE key enables to check the value of welding parameter registered in the JOB No. to overwrite. The setting values are displayed on the left /right digital meters in a flashing mode.
* To change the JOB No. to register, press the SAVE key. The display returns to the status described in step 1.
* To cancel the memory registration, press the LOAD key. The storage function mode is terminated.

4. Press the ENTER key.

* The welding condition is registered with the selected JOB No., and the storage function mode is terminated.
  The registered welding condition can be read out for use.

6.5.2 Read out of welding conditions

This section explains how to read out the welding conditions registered in the memory.

TIPS

- **The current welding condition set on the operation panel is overwritten by the welding conditions read out. To save the current welding condition, ensure to register it to the memory.**

STEP

1. Press the LOAD key.

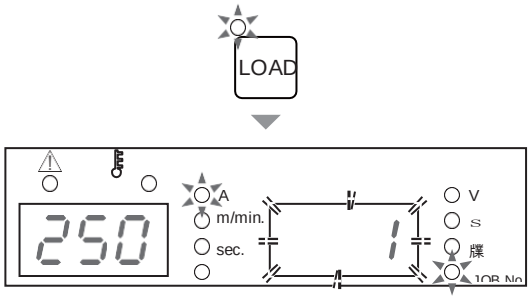

* The system turns to the load mode, and the LED of the LOAD key lights up.
* The JOB No. (registration No.) is displayed on the right digital meter in a flashing mode, and the LED of JOB No. lights up.
* On the left digital meter, the setting value of the welding current registered to the JOB No. if any is displayed (if there is no registration, "- - -" is displayed), and the "A" LED lights up.

2. Turn the parameter adjustment knob and select the JOB No. to read out.

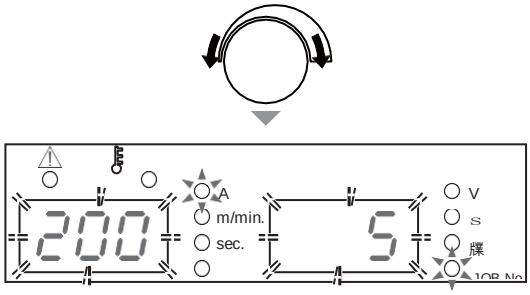

* When there is no registration data on the selected JOB No., "- - -" is displayed on the left digital meter.
* When there is any registration data on the selected JOB No., the setting value of the welding current is displayed on the left digital meter. At this time, the LEDs for the keys of crater or wire material also light up.

3. **Press the ENTER key.**

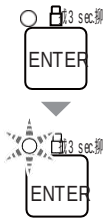

* The LED of ENTER key flashes.
* Pressing the DISPLAY CHANGE key enables to check the set values of welding conditions (welding parameters) to read out. The setting values are displayed on the left /right digital meters in a flashing mode.
* To change the JOB No. to read out, press the LOAD key. The display returns to the status described in step 1.
* To cancel the read out, press the SAVE key. The read mode is terminated.

4. **Press the ENTER key.**

* The welding condition is registered with the selected JOB No., and the read mode is terminated. The selected position on the operation panel and the current /voltage values are overwritten to those read out.

6.5.3 Deletion of memory registration

This section explains how to delete the welding conditions registered to the memory.

NOTE

- **The deleted data cannot be restored. Before deleting the stored welding condition, carefully check the welding JOB No. to delete.**

STEP

1. **Turn off the power switch.**
2. **With the LOAD key and the SAVE key depressed together, turn ON the power switch.**

● Depress these two keys until "dEL" is displayed on the left digital meter. Release the keys after "dEL" is displayed.

* "dEL" is displayed when the system transits to the DELETE mode.
* The JOB No. (registration No.) is displayed on the right digital meter in a flashing mode, and the LED of JOB No. lights up.

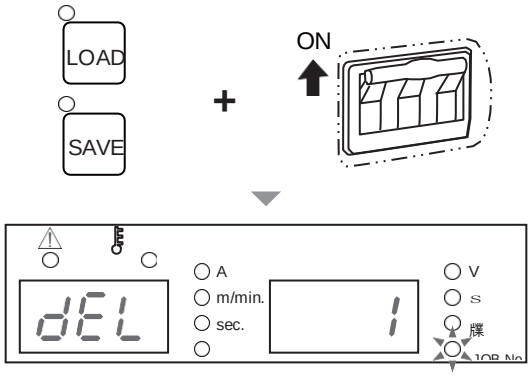

3. **Turn the parameter adjustment knob and select the JOB No. to delete.**

- To delete all the registration at the same time, turn the parameter adjustment knob counterclockwise, to display "ALL" on the right digital meter.
  When "ALL" is selected, the current welding condition set on the operation panel is also deleted, and the welding parameters including the internal functions return to the initial values.

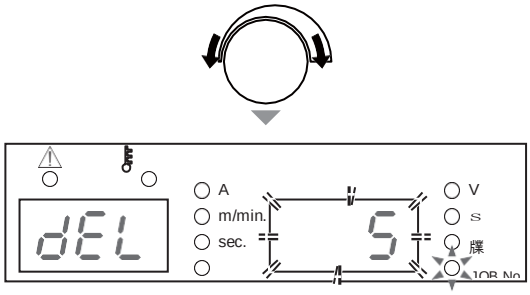

4. **Press the ENTER key.**

* The display "dEL" on the left digital meter starts flashing.
* Pressing the DISPLAY CHANGE key enables to check the value of welding parameter of the JOB No. to delete. The set values are displayed on the left / right digital meters in a flashing mode.
* To change the JOB No. to delete, press the LOAD key or the SAVE key. The display returns to the status described in step 2.
* To cancel the deletion, turn off the power switch. The delete mode is terminated.

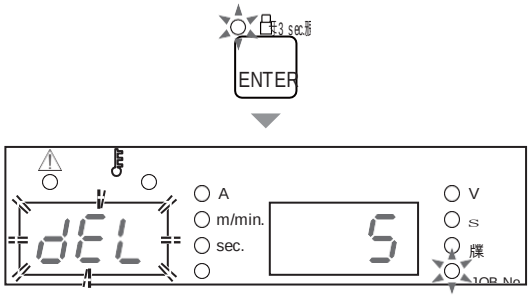

5. **Press the ENTER key.**

* The welding condition of the selected JOB No. is deleted, and "End" is displayed on the left /right digital meters.

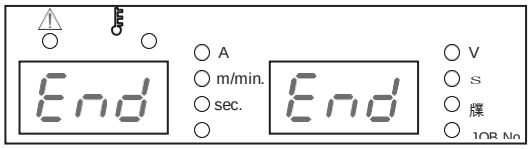

6. **Check that "End" is displayed on the left/right digital meters and turn off the power switch.**

* The power LED switch lights off. The status returns to normal when the power switch is turned on.

6.6 Setting Welding Conditions

This section explains how to set the welding conditions (welding mode or welding parameters).

6.6.1 Welding mode setting

Available combination of the welding mode is listed in the table below. Selecting unavailable combination displays “- - -“on the right /left digital meter in a flashing mode.

Standard specification

WELDING METHOD	GAS (*1)	WIRE MATERIALS	WIRE DIA. (mm)	TRAVEL SPEED	Penetration adjustment
DC	CO_2	G3Si1	0.8/1.0/ 1.2	(*2) (*3)	Enable
		G3Si1 (Fill)	1.2	STANDARD (*3)	Enable
		CrNi (Fill)	1.2	STANDARD (*3)	Enable
	MAG (20 % CO_2) (*1-1)	G3Si1	0.8/1.0/1.2	(*2) (*3)	Enable
		G3Si1 (Fill)	1.2	STANDARD (*3)	Enable
		CrNi (Fill)	1.2	STANDARD (*3)	Enable
	MAG (10 % CO_2) (*1-2)	G3Si1	0.8/1.0/ 1.2	(*2) (*3)	Enable
	MIG (2 % O_2) (*1-3)	CrNi	0.8/1.0/1.2	(*2) (*3)	Enable
		CrNi (Ferr)	0.8/1.0/1.2	(*2) (*3)	Enable
	MIG (2.5 % CO_2) (*1-4)	CrNi	0.8/1.0/1.2	(*2) (*3)	Enable
		CrNi (Ferr)	0.8/1.0/1.2	(*2) (*3)	Enable
	MIG (100 % Ar) (*1-5)	Al/99	1.2/1.6	(*2) (*3)	-
		Al/Mg	1.0/1.2/1.6	(*2) (*3)	-
		Cu Si	0.8/1.0/1.2	(*2) (*3)	-
		Cu Al	0.8/1.0/1.2	(*2) (*3)	-
DC LOW SPATTER (*4)	CO_2	G3Si1	0.8/1.0/1.2	STANDARD	-
	MAG (20 % CO_2) (*1-1)	G3Si1	0.8/1.0/1.2	STANDARD	-
	MAG (10 % CO_2) (*1-2)	G3Si1	0.8/1.0/1.2	STANDARD	-
	MIG (2 % O_2) (*1-3)	CrNi	0.8/1.0/1.2	STANDARD	-
		CrNi (Ferr)	0.8/1.0/1.2	STANDARD	-
	MIG (2.5 % CO_2) (*1-4)	CrNi	0.8/1.0/1.2	STANDARD	-
		CrNi (Ferr)	0.8/1.0/1.2	STANDARD	-

*1: Note that the "collective" voltage adjustment may not meet the appropriate condition if a mixing gas other than those with the following mixing ratios is used.

*1-1: MAG gas: Argon (Ar) 80 % + Carbon dioxide (CO_2)20 %

*1-2: MAG gas: Argon (Ar) 90 % + Carbon dioxide (CO_2)10 %

*1-3: MIG gas (stainless steel): Argon(Ar) 98 % + Oxygen (O_2)2 %

*1-4: MIG gas: Argon(Ar)97.5 % + Carbon oxygen (CO_2)2.5 %

*1-5: MIG gas (Aluminum/Aluminum bronze/Silicon bronze): Argon (Ar)100 %

*2: Available for applications either of "STANDARD" or "HIGH".

*3: For "STANDARD" mode, the standard mode or extended cable mode (extended mode of power cable) is available. (☞ 6.7.2.1 F1: Standard/Extended cable mode)

*4: In the welding of DC low spattering, the following devices are necessary for wire feeder and welding torch. For details, refer to the instruction manual of each device.

- Wire feeder: CMV-7402
- Welding torch: WT3500V-SD or WT3510V-SD

<Relationship of wire diameter and welding current at aluminum welding (Reference)>

Aluminum material	Wire diameter (mmΦ)	Welding method	Range of stable welding power source (A)
HARD ALUMINUM (A5183, A5336 etc.)	1.0	DC	60 to 150
	1.2	DC	75 to 250
	1.6	DC	100 to 350
SOFT ALUMINUM (A4043 etc.)	1.2	DC	90 to 250
	1.6	DC	100 to 350

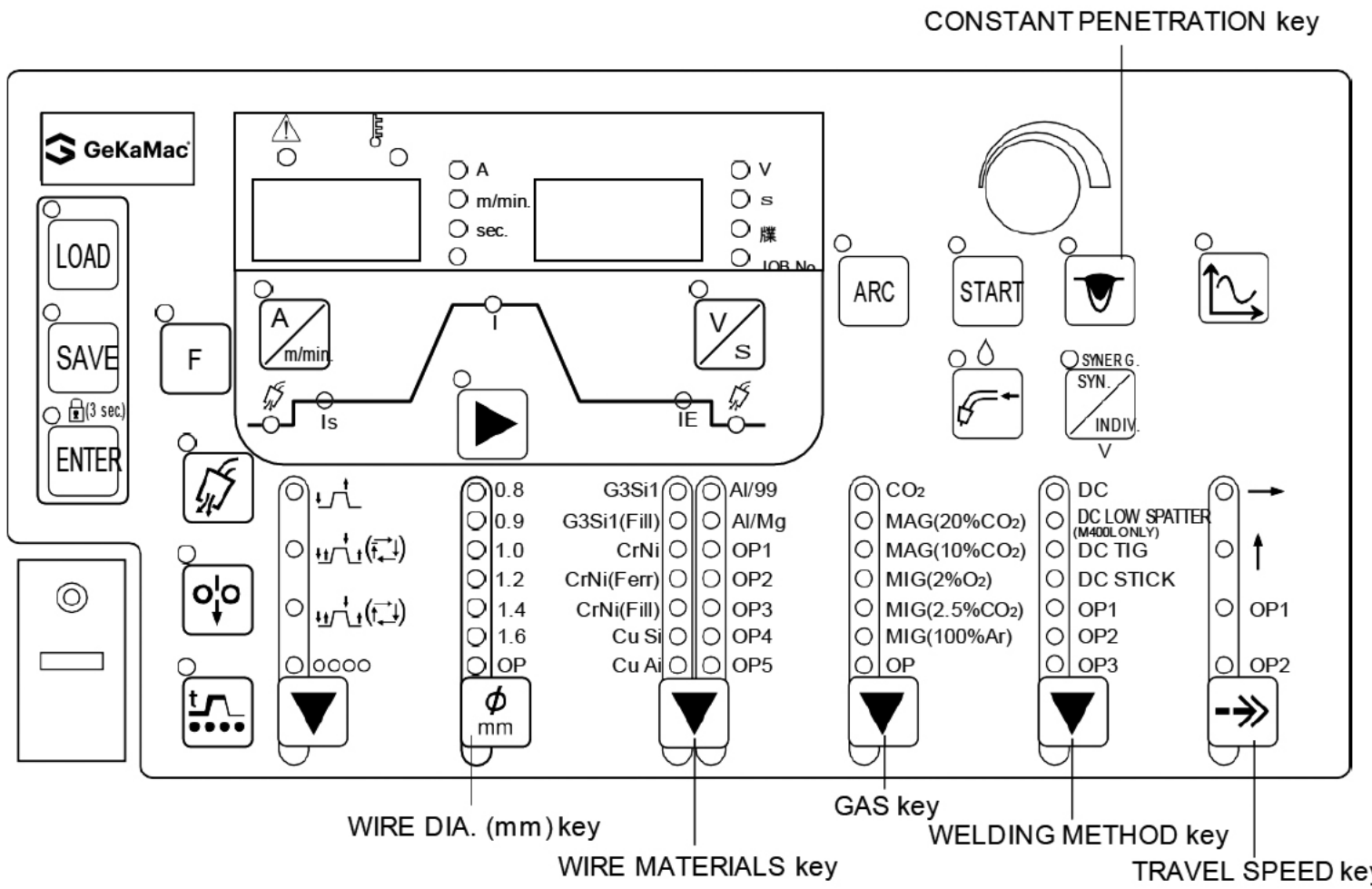

STEP

1. **Press the WELDING METHOD key, and select the welding method to apply.**
2. **Press the WIRE MATERIALS key, and select the wire material to apply.**
3. **Press the GAS key, and select the shielding gas to apply.**
4. **Press the WIRE DIA. (mm) key, and select the wire diameter to apply.**
5. **Press the CONSTANT PENETRATION key, and select to apply the penetration control.**

   * When the LED of CONSTANT PENETRATION key is ON: penetration control is activated.
     When the LED of CONSTANT PENETRATION key is OFF: penetration control is deactivated.
   * For the details of penetration control; (☞ 6.6.7 Penetration control adjustment)

6.6.2 Setting welding parameter

This section explains how to set the welding parameter (gas discharge time, welding current /voltage). The welding parameters are set according to the welding sequence.

6.6.2.1 Welding sequence

The basic welding sequence is the process of PRE FLOW, MAIN CONDITION, and POST FLOW. To this sequence, initial condition and crater-fill condition can be added depending on the crater setting. The welding parameters such as gas discharge time, welding current and voltage should be set to this sequence.

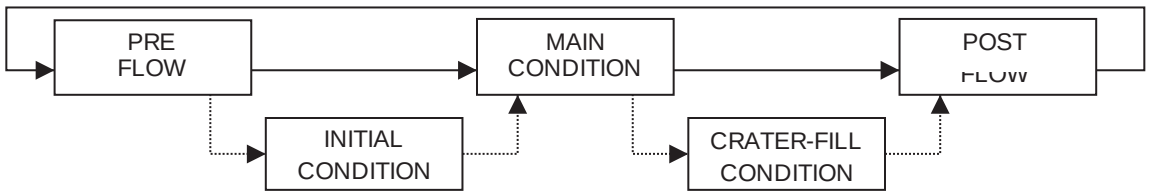

Each sequence process has the following description:

Process	Description
PRE FLOW	It is the sequence to discharge gas before the welding starts.
INITIAL CONDITION	It is the sequence to process the welding start.
MAIN CONDITION	It is the welding sequence.
CRATER -FILL CONDITION	It is the sequence to process the crater part.
POST FLOW	It is the sequence to discharge gas after the welding completes.

6.6.2.2 Welding parameter setting

This section explains how to set the welding parameters (gas discharge time, welding current / voltage) according to the welding sequence.

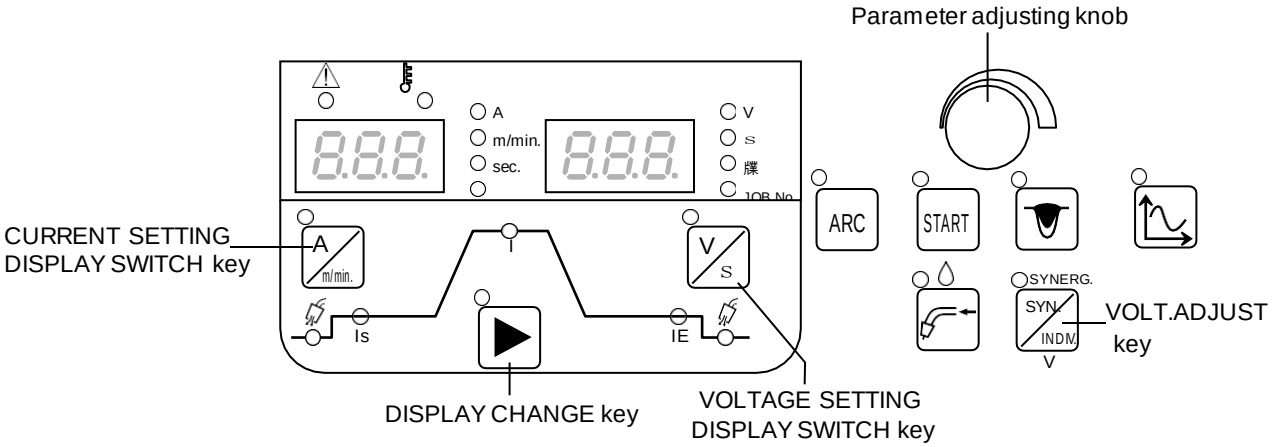

STEP

1. **Set the gas discharge time.**

- Press the DISPLAY CHANGE key, and select the LED of "PRE FLOW" (or "POST FLOW").
- Turn the parameter adjustment knob to set the gas discharge time.
  The set parameter is displayed on the left digital meter.

2. **Set the welding current.**

- Press the DISPLAY CHANGE key and select the LED of "MAIN CONDITION" (or "INITIAL CONDITION" or "CRATER-FILL CONDITION").
- Check the lighting on the LED "A" (unit of welding current). When the LED is lights off, press the "CURRENT SETTING DISPLAY SWITCH" key to light up the LED.
  (The welding current can be also set based on the wire feed speed. In this case, refer to "6.7.2.20 F24: Wire feeding speed setting")
- Turn the parameter adjustment knob to set the welding current.
  The set parameter is displayed on the left digital meter.

TIPS

- **In the setting of welding current, the wire feed speed automatically set according to the welding current can be checked. Press the "CURRENT SETTING DISPLAY SWITCH" key to light off the LED of the key ("m/min": On, "A": Off), and the value displayed on the left digital meter switches to the display of wire feed speed. Pressing the "CURRENT SETTING DISPLAY SWITCH" key again to light on the LED of the key ("m/min": Off) returns the display to the one of welding current.**

3. **Set the welding voltage.**

- Check the lighting on the LED "V" (unit of welding voltage). When the LED is lights off, press the "VOLTAGE SETTING DISPLAY SWITCH" key to light up the LED.
- Turn the parameter adjustment knob to set the welding voltage.
  The set value is displayed on the right digital meter.
  At SYNERGIC mode: fine adjustment is carried out based on the welding voltage automatically set according to the welding current.
  At INDIVIDUAL mode: voltage setting is made in regardless of the welding current.
  Switch the mode by the "VOLT. ADJUST" key. (☞ 6.6.5 Welding voltage adjustment)
  The mode set by the "VOLT. ADJUST" key is applied all of the conditions (INITIAL CONDITION / MAIN CONDITION /CRATER-FILL CONDITION).

4. **Register to the memory as necessary. (☞ 6.5 Memory Function of Welding Conditions)**

6.6.3 Crater setting

This section explains the details of crater treatment and torch switch operation.

There are modes listed below for the crater setting. For initialization conditions, select availability by the INITIAL CONDITION key.

Mode	Initial condition	Description
CRATER-FILL OFF	-	In the welding process, only available process is the main welding. (☞ 6.6.3.1 Crater "OFF")
CRATER-FILL ON	Unavailable	After the main welding, the welding process on the "Crater" condition is available. (☞ 6.6.3.2 Crater "ON" (no initial condition))
	Available	Adding to the above, the welding process is available by the initial condition before the main welding. (☞ 6.6.3.3 Crater "ON" (with initial condition))
CRATER-FILL ON (REPEATED)	Unavailable	After the main welding, the welding process on the "Crater" condition is available. Furthermore, even after the CRATER phases, turning ON the torch switch within 2 seconds enables to carry out the welding process on the "Crater" condition again. (☞ 6.6.3.4 Crater (Repeated))
	Available	Adding to the above, the welding process is available by the initial condition before the main welding. (☞ 6.6.3.3 Crater "ON" (with initial condition))
Arc Spot	-	The welding process by the arc spot is available. (☞ 6.6.4 Arc spot time)

The above-mentioned mode switches in the following order by each pressing the CRATER-FILL key.
"CRATER FILL OFF" - "CRATER FILL ON" - "CRATER FILL ON (REPEATED)" - "Arc Spot".

TIPS

- **Even in the Crater-fill off mode, using the internal function (F45) enables to carry out the welding process in the initial condition before the main welding, and the welding process in the Crater condition after the main welding. (☞ 6.7.2.32 F45/F46/F47: Special crater sequence (effective/initial standard time setting/crater standard time setting))**

6.6.3.1 Crater "OFF"

Select "CRATER OFF" by the CRATER-FILL key.

- In synchronous to the ON /OFF operation of the torch switch, the welding starts /stops.

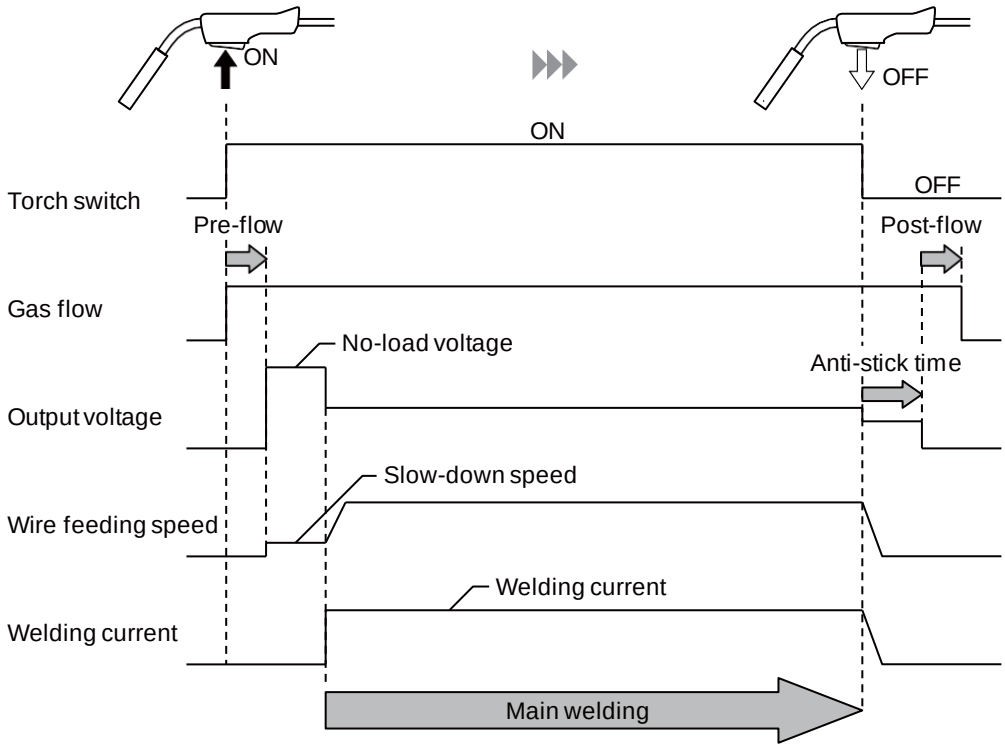

6.6.3.2 Crater "ON" (no initial condition)

Select "CRATER-FILL ON" by the CRATER-FILL key to light off the LED of the INITIAL CONDITION key.

- Carry out twice the ON /OFF operation of the torch switch and carry out the welding operation. In the second ON operation, the welding sequence is carried out by the crater current.
- Even if the torch switch is switched off during welding, the signal will be self-hold. (The torch switch should remain depressed and held during the CRATER phrases.)

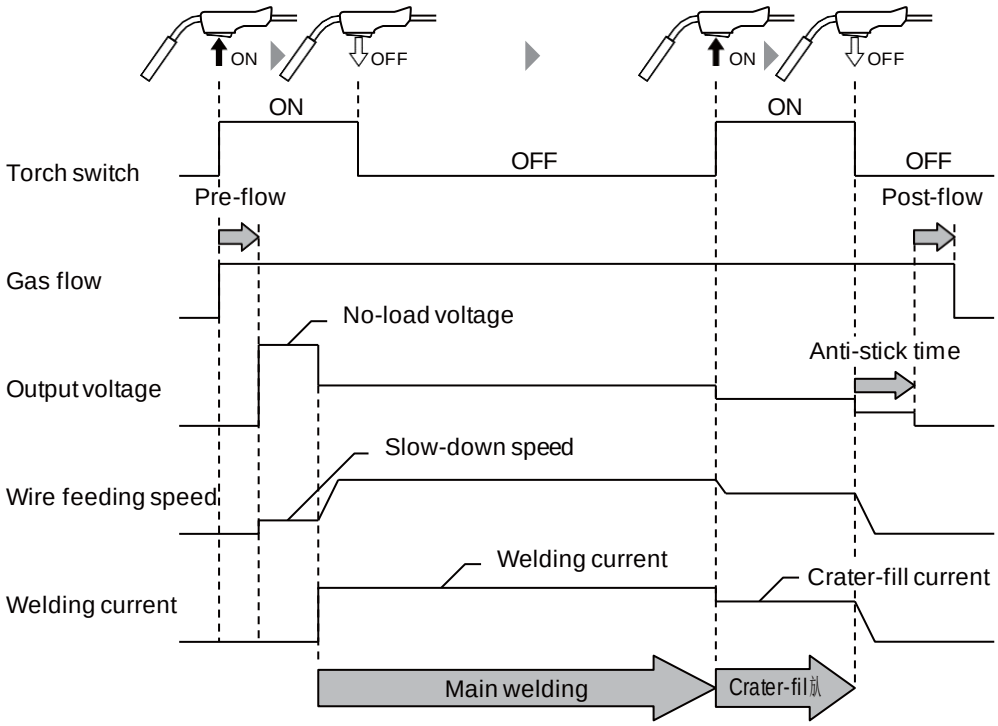

6.6.3.3 Crater "ON" (with initial condition)

Select "CRATER-FILL ON" by the CRATER-FILL key to light on the LED of the INITIAL CONDITION key.

- Carry out twice the ON /OFF operation of the torch switch and carry out the welding operation. The operation from the first ON to OFF enables the welding by the initial current, and the second ON operation enables the welding by the crater current.
- Even if the torch switch is switched off during welding, the signal will be self-hold. (The torch switch should remain depressed and held during the INITIAL and CRATER phrases.)
- Welding method in the initial condition is the same with the main welding.

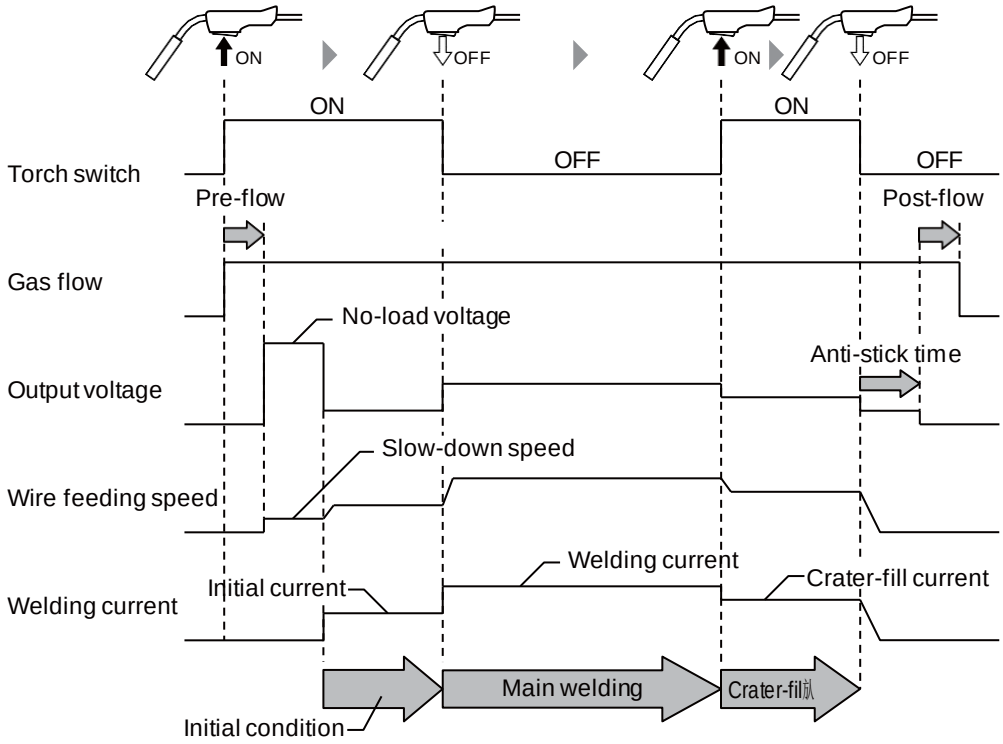

6.6.3.4 Crater (Repeated)

Select "CRATER-FILL ON (REPEATED)" by the CRATER SWITCH key.

- The torch switch operation until the crater treatment is the same with the welding of "CRATER-FILL ON". (☞ 6.6.3.2 Crater "ON" (no initial condition))
- In the crater treatment, if the torch switch is turned on again within 2 seconds, the machine starts on the "Crater" condition and continues operation. Repeating this allows crater process to be carried out as many times as needed.

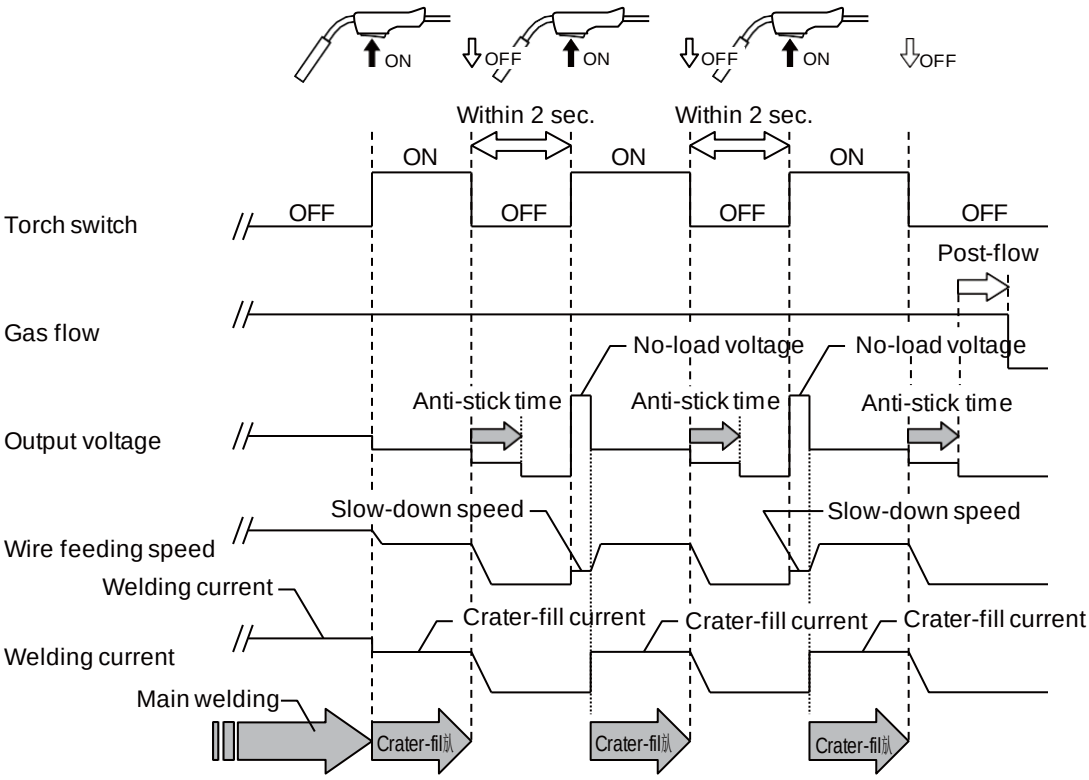

6.6.4 Arc spot time

This section explains the details of arc spot and torch switch operation.
Selecting "ARC SPOT" by the CRATER-FILL key allows the machine in the main mode.

- In this mode, the torch switch remains to be ON for welding operation. When the arc spot time elapses, the welding automatically stops.
- The arc spot time is displayed on the left digital meter when pressing the SPOT TIME key and is adjustable by the parameter adjustment knob.
- Turning OFF the torch switch before reaching the arc spot time starts the anti-stick treatment from then.

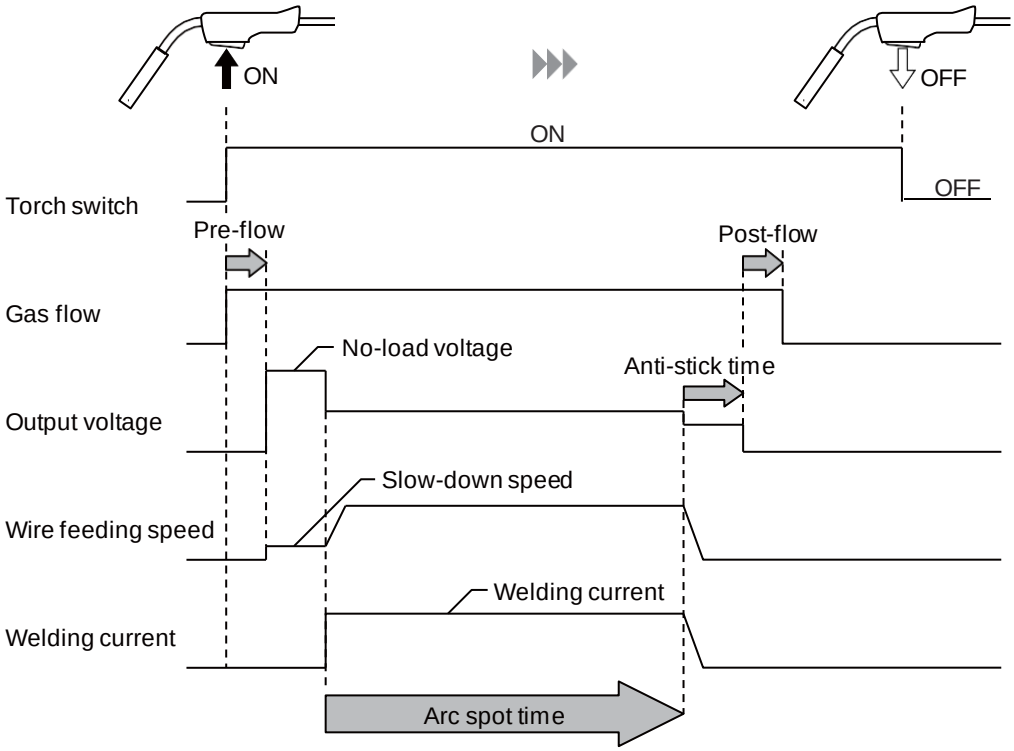

TIPS

- **In carrying out the arc spot welding, purchase the nozzle especially for arc spot (optionally available). For details on the nozzle for arc spot, see the instruction manual of the torch.**

6.6.5 Welding voltage adjustment

This section explains how to adjust the welding voltage. The adjustment of welding voltage can be carried out either by the SYNERGIC mode or INDIVIDUAL mode.

TIPS

- **Some conditions such as synergic condition does not meet the appropriate level if a mixing gas ratio of shield gas is not the specified value. (☞ 6.6.1 Welding mode setting)**
- **Even when the base material side/torch side cable or torch cable is extended, adjust to a higher voltage setting beforehand in consideration of voltage decrease.**
- **The voltage displayed during the setting or welding is the voltage of output terminal (base metal side) between the wire feeder and welding power supply.**

■ SYNERGIC mode

Press the VOLT.ADJUST key. When the LED of the key is ON, it means the SYNERGIC mode is applied.

- The welding voltage is automatically set to the values corresponding to the welding current.
- The voltage value automatically set can be finely adjusted by the parameter adjustment knob. (Welding voltage on the positive side: high, negative side: low.)

■ INDIVIDUAL mode

Press the VOLT.ADJUST key. When the LED of the key is OFF, it means the INDIVIDUAL mode is applied.

- Press the VOLT.ADJUST key. When the LED of the key is OFF, it means the INDIVIDUAL mode is applied.
- The welding voltage can be adjusted by the parameter adjustment knob.

6.6.6 Arc characteristics adjustment

This section explains the adjustment procedure of arc characteristics (arc status). Using this function enables to adjust the arc status into soft or hard condition.

Press the ARC CONTROL key. When the LED of the key is ON, it means the arc control is ON.
The setting value is displayed on the right digital meter and can be adjusted by the parameter adjustment knob. (Positive value: soft arc condition, negative value: hard arc condition)

TIPS

- **It is likely that good weld can be obtained by adjusting it to "hard" in low current region and "soft" in high current region.**
- **When using an extended cable for the base material side /torch side or using an extended torch cable, it is likely that good welding can be performed by adjusting it to "hard."**

6.6.7 Penetration control adjustment

This section explains how to adjust the penetration control. Using the constant penetration function enables to automatically adjust the wire feed speed so that the constant welding current can be assured even when the wire feeding length changes.

Press the CONSTANT PENETRATION key. When the LED of the key is ON, it means the penetration control is ON.
This results in reduction of changes in penetration depth and bead width of the base material. Especially for welding where you desire to make penetration depth constant, use the welding power source with this penetration control function enabled.

TIPS

- **The penetration control function is available when "MILD STEEL SOLID", "MILD STEEL CORED", "STAINLESS STEEL SOLID" or "STAINLESS STEEL CORED" is selected by the WIRE MATERIALS key.**
- **The penetration control functions only during the production weld while it does not during the initial and crater processes. Also, the function cannot be used in arc spot.**

6.7 Setting Internal Functions

This section explains how to set the internal functions with the details.
The internal functions can be customized according to the using environment of the customer for further convenient use of the welding power source.

6.7.1 Setting procedure

This section explains how to set the internal functions.
Details of internal function (☞ 6.7.2 Detailed information on internal functions)

TIPS

- **The internal function is activated at the point when the setting value is changed. To change the set values of internal functions, ensure that there is no mistake in the function No. as well as in the function setting.**

STEP

1. **Depress the F (Function) key for one second or more.**

   * The function No. is displayed on the left digital meter in a flashing mode.
   * The setting value of each function No. is displayed on the right digital meter.

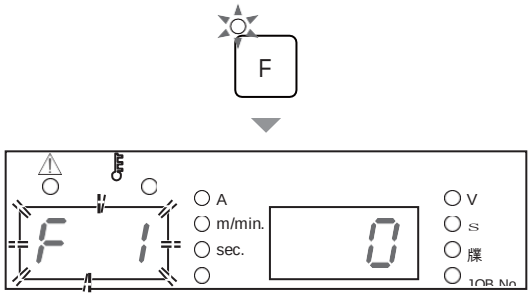

2. **Turn the parameter adjustment knob, to display the function No. to set.**

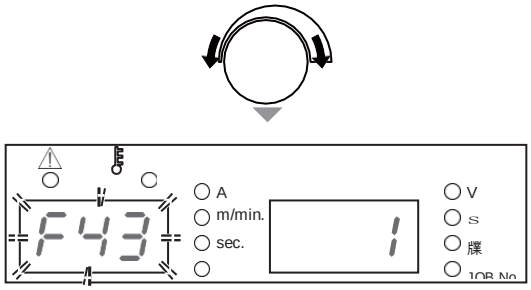

3. **Press the F (Function) key again.**

   * The display on the right digital meter changes to a flashing mode.

4. **Turn the parameter adjustment knob, and change the setting value.**

   * The set value is activated as it is changed.
   * Pressing the F (Function) key enables to return the display to the status described in step 1.

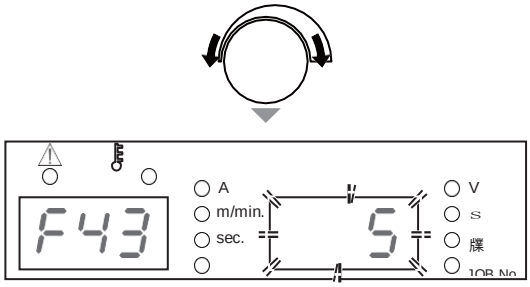

5. **Depress the F (Function) key for one second or more.**

   * The setting of internal function completes, and the display returns to a normal state.

6.7.2 Detailed information on internal functions

This section explains the detailed information of internal functions in the order of function No.

6.7.2.1 F1: Standard/Extended cable mode

Sets the the welding control status for extended cables for the application of STANDARD mode. This function is available when TRAVEL SPEED is set to "STANDARD" and WELDING METHOD is set to "DC".

Extending the cables at the base metal side / torch side or power cables such as torch cables can cause extraordinary volume of spatter. When this happens, turning this function ON (extended cable mode) can improve the status.

- "ON": Extended cable mode
  Set to "ON" for the length of extension cable longer than 30 m. The LED of STANDARD starts flashing when setting to "ON".
- "OFF": Standard mode

TIPS

- **In using the welding power source in the "HIGH" mode, the setting of this function is set to "OFF" and cannot be changed.**
- **When the status is not improved even by setting of this function to "ON", combined use of the voltage detection cable is recommended.**
  When using the voltage detection cable, set the internal function F38 (Arc voltage direct detection switching) to "ON". (☞ 6.7.2.27 F38: Arc voltage direct detection switching)

6.7.2.2 F4: Auto/Semi-auto mode

In combining the welding power source with a robot or an automatic machine, set I/O (interface) of the welding source according to the application.

Parameter	Setting		
	0 (Semi-automatic)	1 (Automatic machine 1)	2 (Automatic machine 2)
Cancellation of operation stop	After short-circuiting the pins [3]-[4] operation stop terminals on the external connection terminal block TM3, and turn the power on again. (*4)	Short-circuit the operation stop terminal pins [3]-[4] on the external connection terminal block TM3. (*4)	
Stuck wire removal voltage (*1)	Voltage is not output.	Voltage is output for approx. 0.2 seconds after completion of anti-stick process.	
Welding current/voltage setting	Set by operation panel or remote control.	Set by external command voltage(*2)	Set by operation panel or remote control.
Inching	Operation by operation panel or remote control.	Set on the operation panel or short-circuit the pins [5]-[6] of the analog remote control receptacle (CON2). 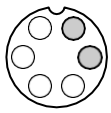 <Analog remote control receptacle> (*5) The above figure shows the front view of analog remote control receptacle which is allocated on the front of welding power source.	
Retract function (*3)	Disabled	Enabled	
Error reset	After removing the cause of error, the power is restored.	After removing the cause of error, the power is restored. Or open/short-circuit the deactivated terminal pins [3]-[4] of the external connection terminal block TM3. (*4)	

*1: In the "Auto" mode, voltage to release welding is output for approx. 0.2 seconds after the anti-stick process. This voltage is output even if the wire is not welded.

*2: If an external command voltage is input, it should be input to the terminal pins ([1]-[3], [1]-[4]) of the remote control receptacle as shown in the below figure.
Relationship between input and output is as the charts provided in "F5: Maximum external command voltage ".(☞ 6.7.2.3 F5: Maximum external command voltage)

Ensure that the command voltage is input at least 100 ms before the start signal is input.
Use the external power source with current capacity of 0.5 mA or more.

⚠ CAUTION

- **Supply 0V to 15 V to E1 and E2.**
  Exceeding 15 V may result in damage to the control circuit of the welding power source.

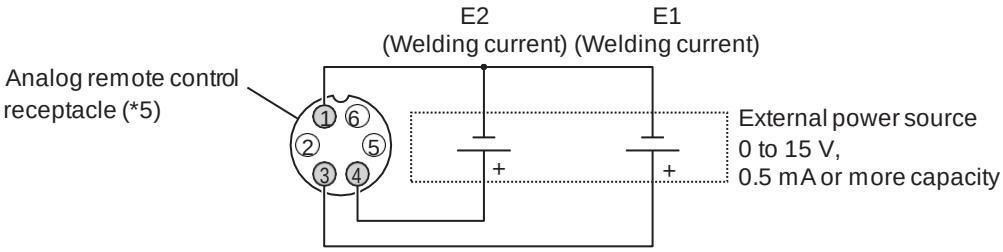

*3: In the "Auto" mode, "3" (Retract) can be allocated to the functions of external input terminals of F29 - F32.
For more information on the retract function, refer to (☞ 6.7.2.22 F29 to F32: External input terminal setting)

*4: For the details of external connection terminal block; (☞ 4.5.2 Connection of automatic machine)

*5: For the applicable plug of analog remote-control receptacles: See specification DPC25-6A/Part No. 4730-009.

6.7.2.3 F5: Maximum external command voltage

When the internal function F4 (Auto / Semi-auto mode) is used with the setting of "1", set the maximum value of command voltage input from outside.
Select either from 10 V, 14 V, or 15 V.

The below charts show the relationship between current / voltage command voltage and welding current / voltage.
(Use these charts as a rough indication. Welding current/voltage against the welding conditions setting voltage may differ from the indications on the charts depending on the external input (command voltage), wire length or routing of the cable at base material side / torch side, or wire feeding length difference.)

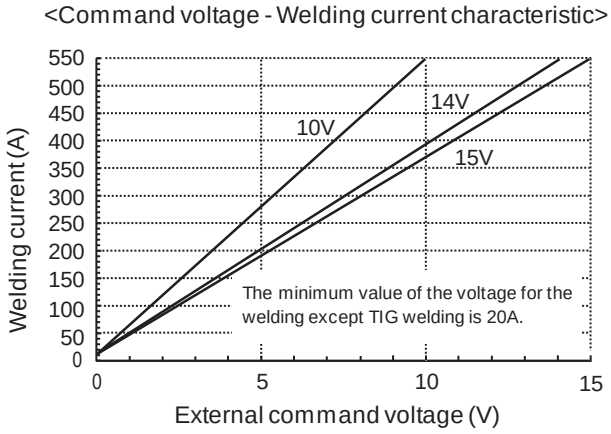

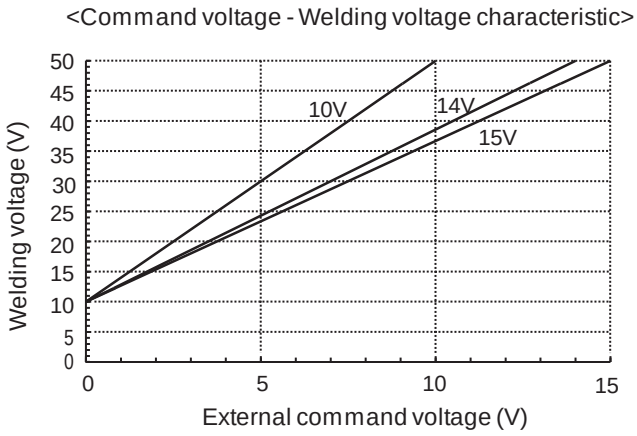

6.7.2.4 F6: Upslope time

When the difference between the initial current and welding current is large, the wire may burn up at the change of the conditions. In this case, adjust the time period changing from the initial current to the welding current (upslope time) longer.

- Setting range of upslope time: 0.0 to 10.0 [sec]

6.7.2.5 F7: Downslope time

When the difference between the welding current and crater current is large, the wire may plunge into weld pool at the change of the conditions (the wire is fed by inertia because the speed reduction is too late). In this case, adjust the time period changing from the welding current to the crater current (downslope time) longer.

- Setting range of downslope time: 0.0 to 10.0 [sec]

6.7.2.6 F8: Welding result display time

Set the time period for the output current and voltage to be displayed on the left/right digital meters in a flashing mode after the completion of welding. Set the display time in the flashing mode.
The value of display time is the average value for 1 second immediately before the completion of welding.

- Setting range of welding result display time: 0 to 60 [sec]

6.7.2.7 F9: Analog remote control scale

Change the setting of the scale plate of analog remote control when using the optional analog remote control.

Rated output current of welding power source	Applicable scale and scale plate
350 A	350/200
500 A	500/350/200

- Scale plate is available separately for 500 A, 350 A, and 200 A. According to the selected scale of analog remote control, replace the scale plate as necessary. (☞ 6.8 Operation of Analog Remote Control (Optional))
- When using the remote control in a low current region, set the scale plate to 200A.

6.7.2.8 F10: Motor overcurrent detection level

Set the over current detection level for the current flowing to the wire feed motor.
If contact resistance of the wire feeding line section increases due to liner wear / tip defect, etc., motor current increases (when the feeding roller does not slip). Monitoring this motor current enables to identify faults of the feeding line.

Set the detection level in the range of 20 to 150 % of the motor rated current.

- The factory default setting is 70 % of 2.8 A (continuous).
  If the current flows to the motor exceed the set value, the alarm display of “E-820” is displayed; output of the welding power source is not stopped.
- According to the use environment such as wires and torches and the customer’s judgment criteria, adjust the detection level at your discretion.

6.7.2.9 F11: Fine adjustment of welding conditions memory

When the analog remote control (optionally available) is used, fine adjustment of the welding current and welding voltage of welding condition stored on the welding condition memory is available. This function is effective when the internal function F4 (Auto /Semi-auto mode) is set to "0".

- [OFF]: disables the function.
- [1] to [30]: enables the function. Turning the welding current adjustment knob on the analog remote control enables to fine adjust the current and turning the voltage knob enables to fine adjust the voltage.
  - Setting range: 1 to 30 %
  - Turning both of the current and voltage knobs to the center of scales sets the welding conditions to those stored on the welding condition memory. Adjust the current /voltage with the standard of the center of scales. To increase the welding current or voltage, turn the knob counterclockwise and to reduce the welding current or voltage, turn the knob clockwise.

Place these knobs in the center positions.

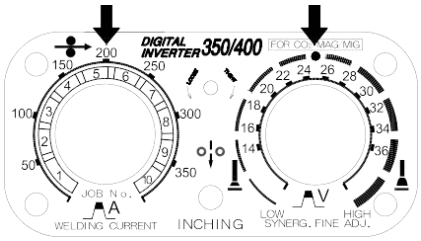

- In the following cases, this function cannot be used:
  - Welding conditions are not registered to the memory;
  - Analog remote control (optional) is not connected to the welding power source;
  - Internal function F44 (Reading welding condition with remote control) is set to "ON" (enabled);
  - Internal function F45 (Special crater sequence) is set to "ON" (enabled);
  - Internal function F48 (Adjusting current with torch switch) is set to "ON" (enabled); or
  - Internal function F51 (Special crater repeat) is set to "ON" (enabled); or
  - Either of the internal functions F29 to F32 (External input terminal setting) is set to either "4" (Start) or "5" (Loading welding condition).
  - Internal function F4 (Auto /Semi-auto mode) is set to a value other than "0" (Semi-auto mode).

6.7.2.10 F12: Operation time of water-cooled pump

Sets the operation time of water-cooled pump after welding ends.
When the water-cooled welding torch is used, the water-cooled pump operates to cool the welding torch as the welding ends. The operation time of water-cooled pump at this time can be set:

- Setting range of water-cooled pump operation time: 20 to 60 min.
- "ON": Water-cooled pump is always ON

6.7.2.11 F13: Turbo start

The welding power source has the turbo start function using capacitor discharge in order to obtain smooth welding start.

- [ON]: enables the function.
- [OFF]: disables the function.

TIPS

- **If wire burning is too strong at the welding start, set this function to [OFF] to disable the turbo start function (disables the function).**

6.7.2.12 F14/F15: Start control (time/current) adjustment

Set the time and current for start control to be performed at the time of welding start.
Depending on the welding conditions and set current value, the appropriate time and current for start control are determined; if proper burning of the wire does not occur at the time of start, adjust the time and current for start control.

For more intense burning, increase the time and current.
For less intense burning, reduce the time and current.

- Set the time from -50 to 50 % through F14 (Start control time adjustment).
- Set the current in the range from -100 to 100 A through F15 (Start control current adjustment).

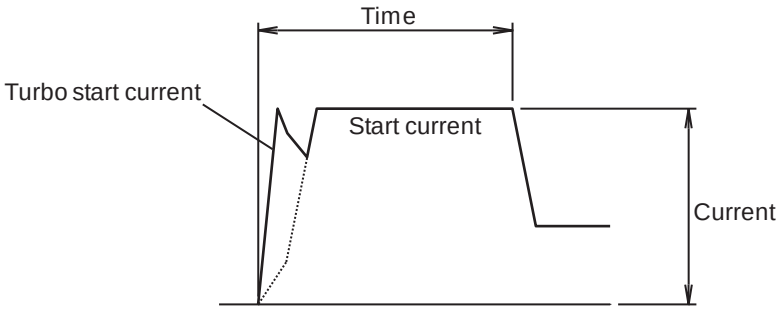

6.7.2.13 F16: Slowdown speed adjustment

Slow-down speed is the speed to slowly feed the wire from the time of the machine start to the time of arc start.
The slowdown speed is automatically set to an appropriate speed depending on the welding method and wire diameter; meanwhile, it can be adjusted through this function if manual setting is preferred.

The setting range is ±1.0 m/min, yet cannot be adjusted slower than 0.4 m/min. Based on "0," adjusting it to the negative direction lowers the speed, and adjusting it to the positive direction accelerates the speed.

When the starting performance is poor, decrease the slow-down speed to a negative value (which lowers the wire feed speed).
When the starting performance is not poor, setting the slow-down speed to a positive value (which accelerates the wire feed speed) can shorten the tact time.

6.7.2.14 F17/F18: Anti-stick time/voltage adjustment

Set the anti-stick time/voltage, which is the anti-stick processing time and voltage. Optimum setting of the anti-stick time/voltage enables to obtain the following effects:

- At the welding completion, wire adhesion to the base material can be prevented.
- The shape of wire tip can be arranged to obtain a stable start of the next welding.

The time and voltage for anti-stick process are automatically set to appropriate conditions depending on the welding method (wire type) and wire diameter; meanwhile, it can be adjusted through this function if wire should cause adhesion at the end of welding or if burning is too intense.

- Adjust the anti-stick process time in the range of ±50 (unit: 0.01 seconds) through the internal function F17. Based on "0," adjusting it to the negative direction shortens the time, and adjusting it to the positive extends the time.
- Adjust the anti-stick process voltage in the range of ± 9.9 V through the internal function F18. Based on "0," adjusting it to the negative values decreases the voltage, and adjusting it to the positive increases the voltage.

6.7.2.15 F19: Switching alarm setting

When alarm occurs, the output of welding power source can be stopped.

Yet for some alarm codes, it is possible to continue welding even if the alarm level is detected, which may sometimes cause the alarm display to be ignored. Using the alarm setting switch function ensures to stop the output from the welding power source.

- [ON]: any alarm detection stops the output of welding power source.
- [OFF]: alarm detection does not stop the output of welding power source.

Means to reset alarms is the same as those for errors, including restoration of the power. (☞ 9.1 Action in Case of Error)

6.7.2.16 F20: Low input voltage detection level

Set the low input voltage detection level on the primary side. When the input voltage is lower than the set value, an error code is displayed.
Set the value in the range of 260 to 400 V.

TIPS

- **The factory default setting is 320 V. However, the specification of input voltage as welding power source is the range of 340 to 460 V. If input voltage is lower than this range, it may affect welding performance.**

6.7.2.17 F21: Maximum cooling fan operation

The cooling fan can be rotated at the maximum rotation speed at all time.

- [ON]: The cooling fan rotates at the maximum rotation speed at all time. Even when it is set to [ON], ensure not to exceed the specified duty cycle. (☞ 2.1.4 Rated duty cycle)
- [OFF]: The cooling fan rotates in a control mode (power-saving operation) due to the temperature detection inside the welding power source.
  This mode is effective in saving power consumption and preventing suction of extra powder dusts.

6.7.2.18 F22: Operation sound switching

Set the operation sound not to be emitted.

- [ON]: Pressing any key on the operation panel enables to sound the operation sound.
- [OFF]: Pressing any key on the operation panel does not enable to sound any operation sound.

6.7.2.19 F23: Sleep mode switching time

When the welding power source is not operated for a fixed period of time, it can be turned into the sleep mode.

- [0]: disables the function.
- [1] to [10]: enables the function.
  Set the transition time to the sleep mode in the range of 1 to 10. During the sleep mode, power consumption is reduced.
  - In the sleep mode, the dot at the first digit on the left /right digital meters flashes. All the other displays on the operation panel are turned OFF.
  - Any operation during the sleep mode restores the condition to the previous state.

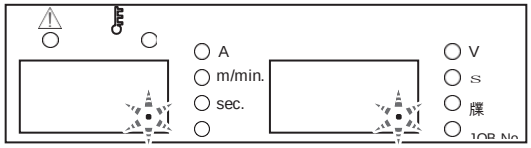

6.7.2.20 F24: Wire feeding speed setting

The welding current can be automatically set based on the wire feed speed.

- [ON]: enables the function.
  - The welding power source is automatically set based on the wire feed speed.
  - Even when the welding mode is changed by the GAS key, the welding current is automatically set based on the set wire feed speed.
  - Each pressing the CURRENT SETTING DISPLAY SWITCH key, the wire feed speed display and the welding current display switches alternatively. Switch to the wire feed speed display, and set the feed speed in the unit of 0.1 m /min.
  - Switching to the welding current display can check the welding current value automatically set.
  - In using the welding power source in the automatic machine mode, refer to the following diagram for the relationship of command voltage and the wire feed speed (when the internal function F4 (Auto / Semi-auto mode) is used with the setting of Automatic machine 1 mode).

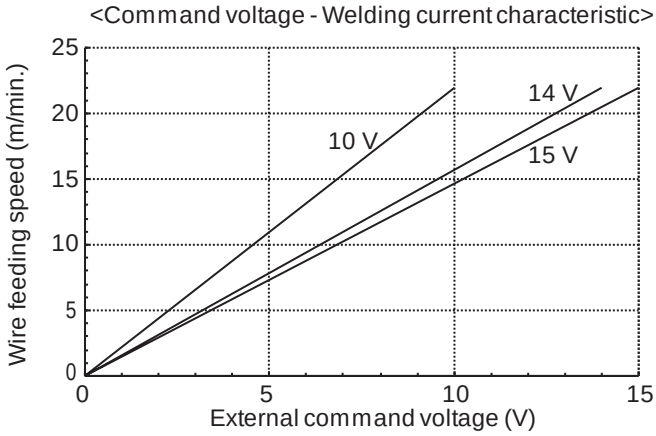

TIPS

- **The wire feed speed with the maximum command voltage is 22 m/min. (Depending on the welding mode, the wire feed speed does not always reach 22 m/min.))**
- **The minimum wire feed speed is approximately 0.6 to 2.0 m/min. (This depends on the welding mode.) Even when a low command voltage is input, it is not possible to set to a value below this.**

- [OFF]: disables the function.
  - The wire feed speed is automatically set based on the welding current.
  - Even when the welding mode is changed by the GAS key, the wire feed speed is automatically set based on the set welding current.
  - Each pressing the CURRENT SETTING DISPLAY SWITCH key, the wire feed speed display and the welding current display switches alternatively. Switch to the welding current display, and set the welding current in the unit of 1 A.
  - Switching to the welding current display can check the wire feed speed automatically set.
  - In using the welding power source in the automatic machine mode, refer to the graph in " 6.7.2.3 F5: Maximum external command voltage". (When the internal function F4 (Auto /Semi-auto mode) is used with the setting of Automatic machine 1 mode)

6.7.2.21 F25 to F28: External output terminal setting (reserved)

The external output terminals (OUT-EXT1 to EXT4 on the external output terminal TM4) are used in connection with the automatic machines of other manufacturers.

6.7.2.22 F29 to F32: External input terminal setting

Set the function of external input terminals. (When using robot or automatic machines)

- F29: set the function of IN-EXT1 ("5" to "9") on the external connection terminal block TM3.
- F30: set the function of IN-EXT2 ("6" to "9") on the external connection terminal block TM3.
- F31: set the function of IN-EXT3 ("7" to "9") on the external connection terminal block TM3.
- F32: set the function of IN-EXT4 ("8" to "9") on the external connection terminal block TM3.

For the details of external connection terminal block; (☞ 4.5.2 Connection of automatic machine)

The functions allocable to F29 to F32 are as follows:

Setting	Function name	Explanation
0	-	No function is allocated.
1	Gas valve	Causing short circuit between terminals opens the gas valve. (*1)
2	Inching	Causing short circuit between terminals starts inching.
3	Retract	When inching operation is performed after short circuit is caused between terminals are short-circuited, the wire feeding motor reverses to retract the wire. (*2)
4	Start	Causing short circuit between terminals starts welding. (torch switch: ON)(*3)
5	Loading welding condition	The welding conditions stored on the memory can be read out by combination of signals. (*4)
6	-	No function is allocated.
7	-	No function is allocated.
8	JOB shift +	Causing short circuit between terminals shifts to the following JOB No.. (*5), (*7)
9	JOB shift -	Causing short circuit between terminals shifts to the previous JOB No.. (*6), (*7)

*1: When the gas valve is opened by the signal from the external input terminal, the gas valve will not close when welding completes or according to the timer (2 minutes). In order to stop gas, ensure to open the terminals.

*2: Causing short circuit between the external input terminals before turning on the inching signal. To stop the operation, turn off the inching signal and then disconnect the external input terminals.

*3: The starting terminal of the feeder receptacle on the front of welding power source becomes deactivated.

*4: Combination of the external input terminals enables to read out the welding conditions of the JOB No. 1 to 16 (Registration No. 1 to 16) registered on the memory. The corresponding JOB No. are as shown in the below table.

JOB No.	Function (external input terminal)			
(Registration No.)	F29(IN-EXT1)	F30(IN-EXT2)	F31(IN-EXT3)	F32(IN-EXT4)
1	OFF (open)	OFF (open)	OFF (open)	OFF (open)
2	ON (close)	OFF (open)	OFF (open)	OFF (open)
3	OFF (open)	ON (close)	OFF (open)	OFF (open)
4	ON (close)	ON (close)	OFF (open)	OFF (open)
5	OFF (open)	OFF (open)	ON (close)	OFF (open)
6	ON (close)	OFF (open)	ON (close)	OFF (open)
7	OFF (open)	ON (close)	ON (close)	OFF (open)
8	ON (close)	ON (close)	ON (close)	OFF (open)
9	OFF (open)	OFF (open)	OFF (open)	ON (close)
10	ON (close)	OFF (open)	OFF (open)	ON (close)
11	OFF (open)	ON (close)	OFF (open)	ON (close)
12	ON (close)	ON (close)	OFF (open)	ON (close)
13	OFF (open)	OFF (open)	ON (close)	ON (close)
14	ON (close)	OFF (open)	ON (close)	ON (close)
15	OFF (open)	ON (close)	ON (close)	ON (close)
16	ON (close)	ON (close)	ON (close)	ON (close)

The external input terminal without the setting "5" is regarded as signal OFF. Accordingly, for the function (external input terminal) which does not require the "ON" status for the JOB No. to read can be set to other functions.

Example 1) In reading out the welding condition of the JOB No.3;
Setting F30 to "5" and turning the signal of external input terminal IN-EXT2 to ON enable to read out the JOB No. 3.
For F29, F31, and F32, other functions can be set.

Example 2) In reading out the welding condition of the JOB No.3;
Setting F29 to F32 to "5" and turning the signal of external input terminal IN-EXT2 to OFF enable to read out the JOB No. 3.

Example 3) In reading out the welding condition of the JOB No.7;
Setting F30 and F31 to "5" and turning the two signals of the external input terminal IN-EXT2/IN-EXT3 to ON enable to read out the JOB No. 7. For F29 and F32, other functions can be set.

*5: The JOB No. shifts to the following number and read out the condition by causing short circuit between terminals for 300msec during JOB shift mode.
If the JOB No. shifts to the largest number, it shifts to the smallest number.

*6: The JOB No. shifts to the previous number and read out the condition by causing short circuit between terminals for 300msec during JOB shift mode.
If the JOB No. shifts to the smallest number, it shifts to the largest number.

*7: When welding condition is not registered in the JOB No., it shifts to the registered JOB No..
The condition cannot be changed during welding.
To release the JOB shift mode, release the external input terminals. The digital meter displays current and voltage after 2 sec have passed.

Example:
In the setting examples of F29: "5" ; F30: "0" ; F31: "5" ; and F32: "0" , the following diagram is available:

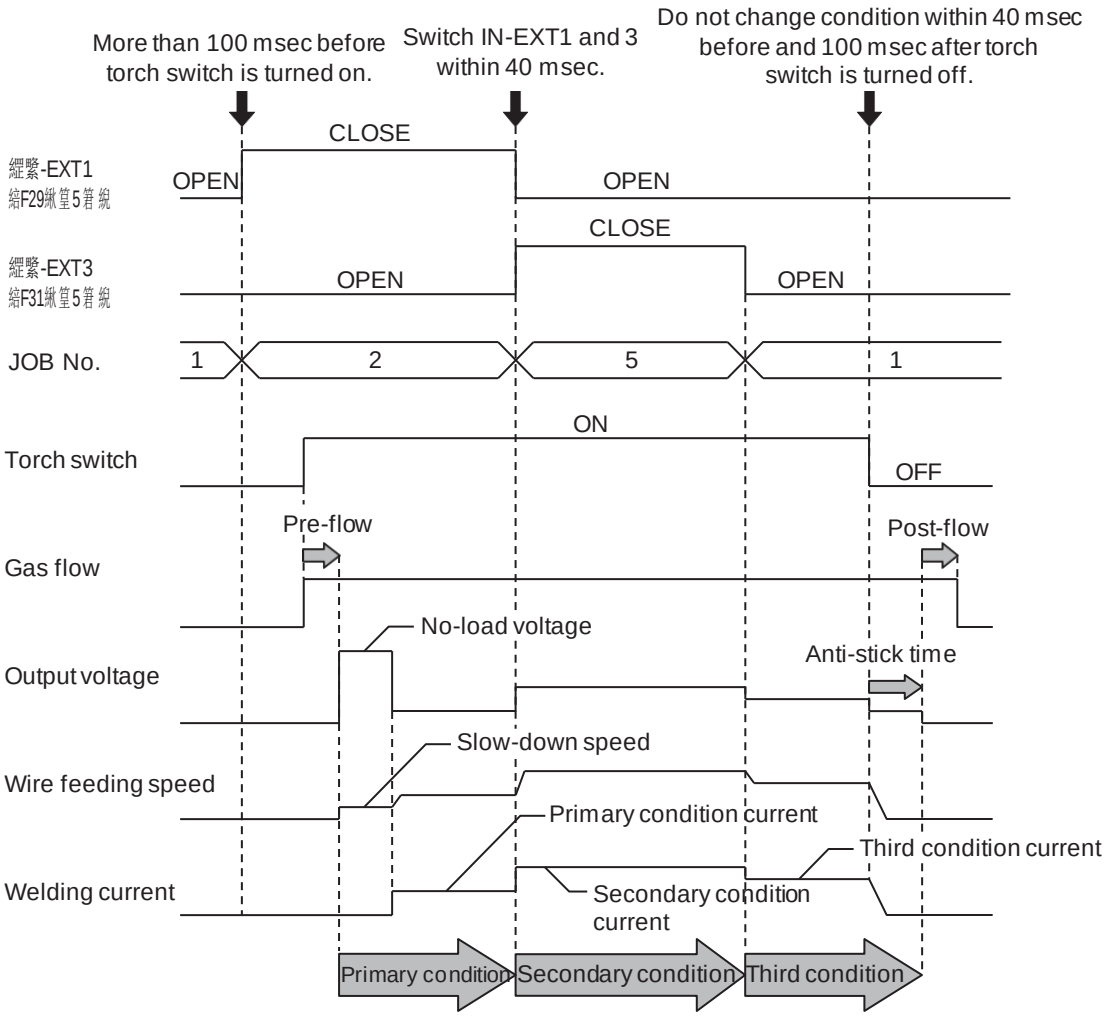

- Before 100 ms of the torch switch ON (start signal "ON"), set the welding condition to "5" for F29 to F32 to read out the welding JOB No.
- To switch plural signals at the same time, carry out the operation within 40 ms.
- From 40 ms before the torch switch OFF (start signal "OFF") to 100 ms after it, do not change the setting of "5".

6.7.2.23 F33: Inhibition ratio display for [Squeeze] detection

Any shift in detecting [Squeeze] leads to spatter generation. This function enables to check the inhabitation ratio (%) of [Squeeze] detection from the welding start to the welding completion.

- Selecting F33 after the welding completion displays the inhabitation ratio on the right digital meter.
- Welding operation is available with F33 selected.
- When the welding is unstable, the inhabitation ratio may accordingly become unstable. When this happens, review the welding condition first.
- Even when the welding is stable, adjust the detection sensitivity of [Squeeze] using the internal functions F36 / F37 (Spatter adjustment) when the inhabitation ratio is 70% or less. (☞ 6.7.2.26 F36 /F37: Spatter adjustment (P1P / P2P))

TIPS

- In short arc welding where short-circuiting and arc are repeated, most of spatter is generated when short-circuit is caused and immediately before arc generation. In the latter timing which is immediately before arc generation, a phenomenon called [Squeeze] shown in the below figure occurs on the wire.
  Detecting this [Squeeze] and rapidly decreasing current at the exact moment prevent molten metal being blown off by arc force and enable significant suppression of generation of spatter. For this purpose, it is important to accurately detect [Squeeze].

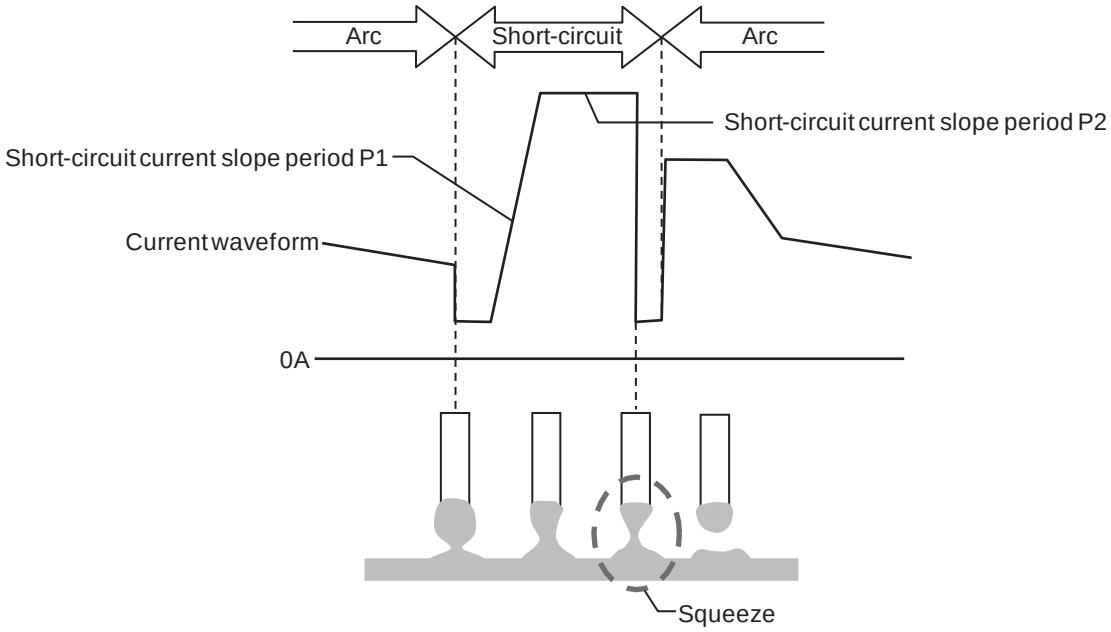

6.7.2.24 F34: Automatic correction of [Squeeze] detection sensitivity

Sets whether to automatically correct the detection sensitivity of [Squeeze].

- [ON]: enables to automatically set the detection sensitivity of [Squeeze].
- [OFF]: disables to automatically set the detection sensitivity of [Squeeze]. Using the internal function F36 / F37 (Spatter adjustment), the detection sensitivity can be manually set. (☞ 6.7.2.26 F36 /F37: Spatter adjustment (P1P/P2P))

TIPS

- Although the sensitivity to detect [Squeeze] is set for each welding method and wire diameter, optimum [Squeeze] detection sensitivity varies depending on the factors such as welding environment (secondary cable length and routing) and welding work conditions (posture, welding conditions such as lap and fillet, and wire extension) and inaccurate sensitivity leads to increase of spatter.

6.7.2.25 F35: Saving [Squeeze] detection sensitivity

Sets whether to return the sensitivity corrected by F34 (Automatic correction of [Squeeze] detection sensitivity) to the initial value when welding completes or maintain it after welding completes.

- [ON]: uses the detection sensitivity at the welding completion also at the start of next welding.
  (When the condition at the welding completion and the one at the start of next welding are significantly different, there may be much spatter at the start of welding.)
- [OFF]: Returns the detection sensitivity at the welding completion to the initial value.
  If there is much spatter at welding start, adjust the initial value in the following step:

STEP

1. **Set the internal functions F36/F37 (Spatter adjustment).**(☞ "6.7.2.26 F36/F37: Spatter adjustment (P1P/P2P)")
2. **Set the internal function F34 (Automatic correction of [Squeeze] detection sensitivity) to ON.**

TIPS

- **If wire extension and welding conditions greatly vary by welding section, it is recommended to use the machine with this function set to [OFF].**

6.7.2.26 F36/F37: Spatter adjustment (P1P/P2P)

Use this function to manually set the detection sensitivity of [Squeeze]. This function is available when the internal function F34 (Automatic correction of [Squeeze] detection sensitivity) is set to [OFF].

Follow the step below for setting the adjustment.

STEP

1. **Set the internal function F34 (Automatic correction of [Squeeze] detection sensitivity) to OFF.**
2. **Display the internal function F36 (Spatter adjustment (P1P)), and carry out the welding with F36 displayed.**
3. **Increase or decrease the setting value of internal function F36 and carry out the welding again.**
   - Repeat this step until the good condition of welding is obtained, by adjusting the set value in the range of -100 to 100.
4. **Display the internal function F37 (Spatter adjustment (P2P)) and carry out the welding with F37 displayed.**
5. **Increase or decrease the setting value of internal function F37 and carry out the welding again.**
   - As in the step 3, repeat the step until good condition is obtained, by adjusting the set value in the range of -100 to 100.

6.7.2.27 F38: Arc voltage direct detection switching

Sets the status of the voltage direct detection terminal on the base metal side of the welding power source or voltage detection terminal of the wire feeder.

Extending the power cable without the cable at the base metal side can cause extraordinary volume of spatter. In this case, turning ON this function by using the voltage detection cable (optionally available) can improve the status.

Connection of voltage detection cable (optionally available) (☞ 4.6 Wiring of Voltage Detection Cable at Base Metal Side)

- [ON]: enables the function.
  Arc voltage can be detected by the voltage direct detection terminal at the base metal side /voltage direct terminal.
- [OFF]: disables the function.

TIPS

- **Use the voltage detection cable (optionally available) when the total length of the extension cable is 30 m or longer.**

6.7.2.28 F39/F40: Current display adjustment (Gain/offset)

Set the adjustment value (gain / offset) when the current display value on the left digital meter is different from the actual current value.

The current value displayed on the digital meter is obtained by software processing of the average value of outputs; therefore, it may not be consistent with the value indicated on a needle meter, etc. When this happens, using this function enables to finely adjust the current display value.

- For F39, set gain, and for F40, set offset.
  Changing the set value only corrects the display; the output welding current does not change.
- For more information on the adjustment procedure, contact dealer.

NOTE

- **Do not carelessly change the setting of this function.**

6.7.2.29 F41/F42: Voltage display adjustment (Gain/offset)

Set the adjustment value (gain / offset) when the voltage display value on the right digital meter is different from the actual voltage value.

The voltage value displayed on the digital meter is obtained by software processing of the average value of outputs; therefore, it may not be consistent with the value indicated on a needle meter, etc. When this happens, using this function enables to finely adjust the voltage display value.

- For F41, set gain, and for F42, set offset.
  Changing the set value only corrects the display; the output welding voltage does not change.
- For more information on the adjustment procedure, contact dealer.

NOTE

- **Do not carelessly change the setting of this function.**

6.7.2.30 F43: CAN ID

When multiple welding power sources are connected with a PC monitoring system, set ID for CAN.

6.7.2.31 F44: Reading welding conditions with remote control

Sets whether to read the welding condition registered to the memory by the analog remote control (optional) or not. This function is effective when the internal function F4 (Auto / Semi-auto mode) is set to "0".

- [ON]: reads the welding condition by the analog remote control (optional)
  - Setting the welding current setting knob on the analog remote control to 1-10 of the scale can read out the conditions stored to the JOB No. 1-10.
  - By the welding voltage setting knob, fine adjustment of the welding voltage of the condition read out is available. (% adjustment)
    Adjust the voltage value based on the center of welding voltage setting knob. To increase the welding voltage, turn the knob clockwise and to reduce the welding voltage, turn the knob counterclockwise. The fine adjustment range for welding voltage is up to ±20 %.

Example:
The right figure shows an example when the JOB No. "3" is read out and the welding voltage is the condition stored on the memory (no fine adjustment).

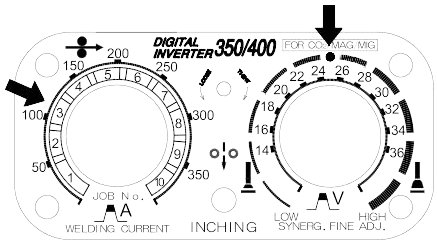

- [OFF]: disables the function.
- In the following cases, this function cannot be used:
  - Welding conditions are not registered to the memory.
  - Analog remote control (optional) is not connected to the welding power source.
  - Internal function F11 (Fine adjustment of welding conditions memory) is set to "1" to "30" (enabled).
  - Internal function F45 (Special crater sequence) is set to "ON" (enabled).
  - Internal function F48 (Adjusting current with torch switch) is set to "ON" (enabled); or
  - Internal function F51 (Special crater repeat) is set to "ON" (enabled); or
  - Either of the internal functions F29 to F32 (External input terminal setting) is set to either "4" (Start) or "5" (Loading welding condition).

6.7.2.32 F45/F46/F47: Special crater sequence (effective/initial standard time setting/ crater standard time setting)

Incorporates initial condition and crater condition in the "No crater" sequence.

- Setting the internal function F45 to [ON] enables to carry out the initial welding /crater treatment set by F46/F47 even in the welding of "No crater" condition.
- When this function is enabled, the LED of "No crater" of the CRATER-FILL key flashes, enabling the internal functions F46 and F47.
- To the internal function F46, set the time for initial welding in the range of 0.0 to 10.0 seconds. Set the value in the range of 0.0 to 10.0 seconds.
- To the internal function F47, set the crater treatment time in the range of 0.0 to 10.0 seconds. Set the value in the range of 0.0 to 10.0 seconds.

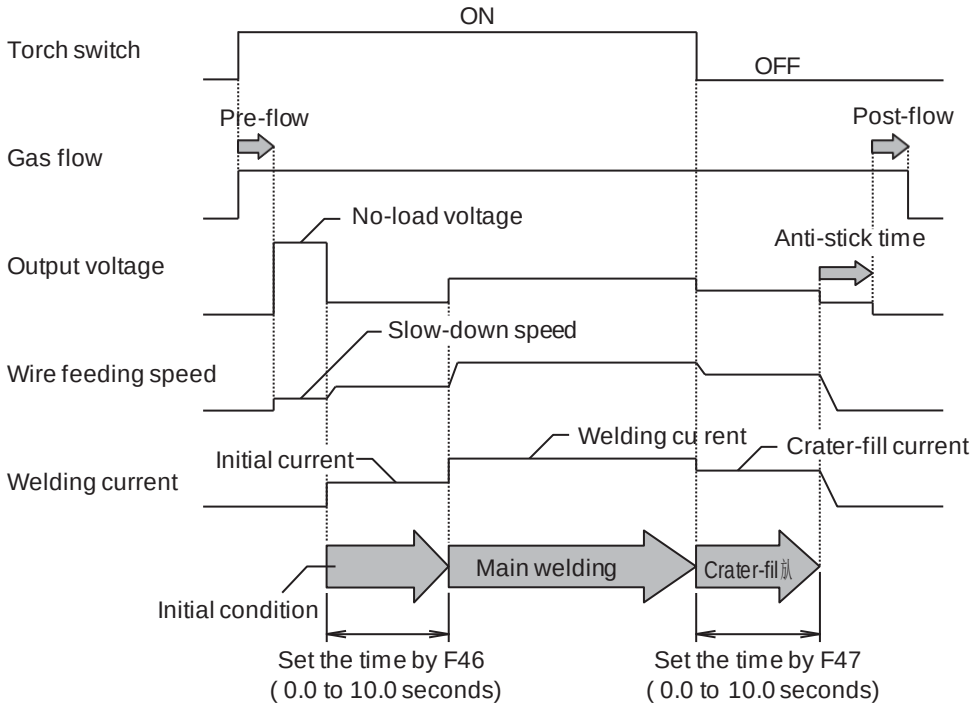

TIPS

- **When the internal function F45 is set to [ON], automatically the setting of "No crater" is selected, disabling other welding modes. (The CRATER-FILL key does not work.)**
- **Welding method at crater treatment is the same as that of main welding.**

- In the following cases, this function cannot be used:
  - Internal function F11 (Fine adjustment of welding conditions memory) is set to "1" to "30" (enabled);
  - Internal function F44 (Reading welding condition with remote control) is set to "ON" (enabled);
  - Internal function F48 (Adjusting current with torch switch) is set to "ON" (enabled); or
  - Internal function F51 (Special crater repeat) is set to "ON" (enabled); or
  - Either of the internal function F29 to F32 (External input terminal setting) is set to "5" (Loading welding condition).

6.7.2.33 F48: Adjusting current with torch switch

Increases /decreases the welding current by the torch switch operation.

- [ON]: the setting of "CRATER-FILL ON" is selected, enabling to increase or decrease welding current by single-clicking or double-clicking the torch switch in the period of welding condition (during start input holding)
  If this function is enabled, the LED of "CRATER-FILL ON" of the CRATER-FILL key flashes.
  Set the increase /decrease current volume through F49 (Current increase and decrease by single-clicking) and F50 (Current increase and decrease by double-clicking).
- [OFF]: disables the function.

TIPS

- **When the internal function F45 is set to [ON], automatically the setting of "CRATER-FILL ON" is selected, disabling other welding modes. (The CRATER-FILL key does not work.)**
- **Setting for current increase and decrease is available for both single-clicking and doubleclicking.**
- **Single-clicking or double-clicking operation should be within 0.3 seconds.**
- **At the time of transition to crater, press the torch switch for at least 0.3 seconds.**
- **Welding method at crater treatment is the same as that of main welding.**

Example:
In the setting examples of Crater setting: ON; Initial condition: OFF; Welding current: 100 A; Crater current: 60 A; F48: "ON"; F49:"-10"; and F50: "20", the following diagram is available:

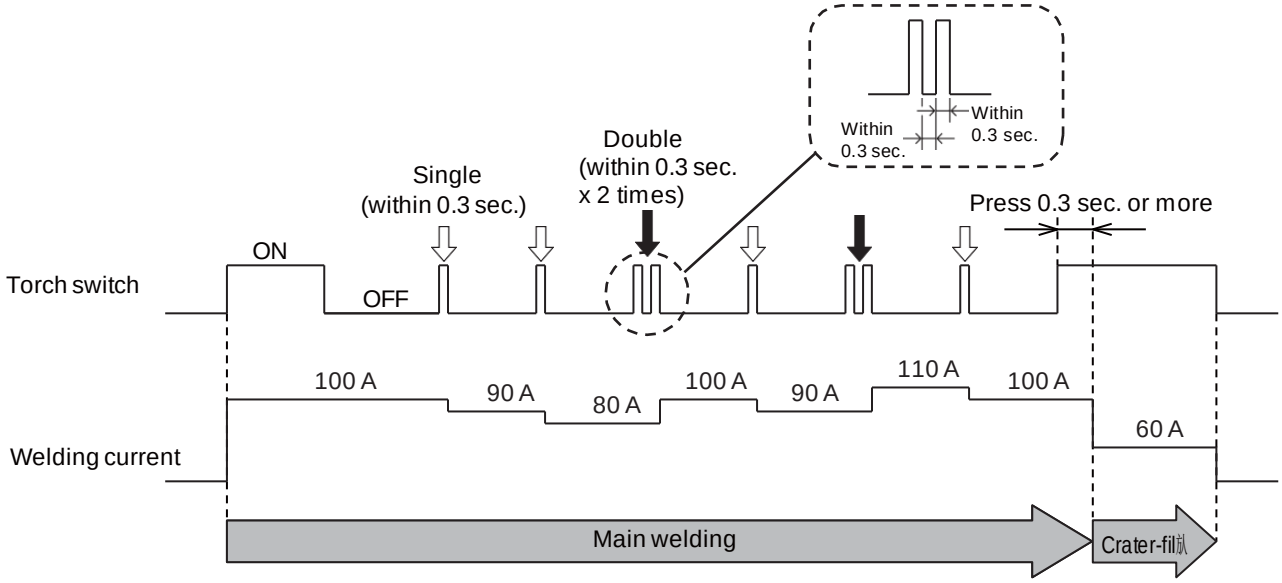

- In the following cases, this function cannot be used:
  - Internal function F11 (Fine adjustment of welding conditions memory) is set to "1" to "30" (enabled);
  - Internal function F44 (Reading welding condition with remote control) is set to "ON" (enabled);
  - Internal function F45 (Special crater sequence) is set to "ON" (enabled);
  - Internal function F51 (Special crater repeat) is set to "ON" (enabled); or
  - Either of the internal functions F29 to F32 (External input terminal setting) is set to either "4" (Start) or "5" (Loading welding condition).

6.7.2.34 F49: Current increase and decrease by single-clicking

To increase / decrease the welding current by the torch switch operation, set the current increase / decrease volume at single-clicking. This function is available when the internal function F48 (Adjusting current with torch switch) is set to [ON].

- Set the current increase/decrease volume by single-clicking in the range of -50 to 50 A.

6.7.2.35 F50: Current increase and decrease by double-clicking

To increase / decrease the welding current by the torch switch operation, set the current increase / decrease volume at double-clicking. This function is available when the internal function F48 (Adjusting current with torch switch) is set to [ON].

- Set the current increase/decrease volume by double-clicking in the range of -50 to 50 A.

6.7.2.36 F51: Special crater repeat

In the sequence of main welding of the "CRATER-FILL ON (REPEATED)" (during start input holding), the torch switch operation can switch the welding and crater treatment repeatedly as many time as needed.

- [ON]: Setting of "CRATER-FILL ON (REPEATED)" is applied, and transits to the crater treatment by single-clicking of the torch switch during the welding sequence (start input holding). It is available to return to the main welding as many times as needed even after transit to the crater treatment by single-clicking of the torch switch.
  When this function is enabled, the LED of "CRATER-FILL ON (REPEATED)" of the CRATER-FILL key flashes.
- [OFF]: disables the function.

TIPS

- When this function is set to [ON], automatically the setting of "CRATER-FILL ON (REPEATED)" is selected, disabling other welding modes. (The CRATER-FILL key does not work.)
- Single-clicking operation should be within 0.3 seconds.
- At the time of transition to crater, press the torch switch for at least 0.3 seconds.
- Welding method at crater treatment is the same as that of main welding.

Example:
In the setting examples of Initial welding current: 80 A; Main welding current: 100 A; and Crater current: 60 A, the following diagram is available:

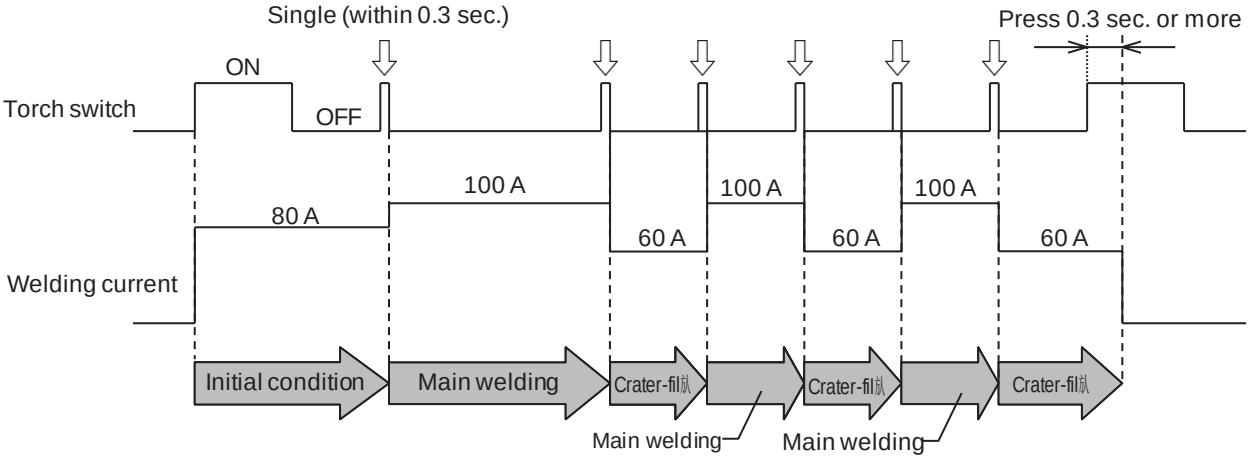

- In the following cases, this function cannot be used:
  - Internal function F11 (Fine adjustment of welding conditions memory) is set to "1" to "30" (enabled);
  - Internal function F44 (Reading welding condition with remote control) is set to "ON" (enabled);
  - Internal function F45 (Special crater sequence) is set to "ON" (enabled);
  - Internal function F48 (Adjusting current with torch switch) is set to "ON" (enabled); or
  - Either of the internal functions F29 to F32 (External input terminal setting) is set to either "4" (Start) or "5" (Loading welding condition).

6.7.2.37 F52: Data type of data log function

This function enables to select data to save when using the data log function.
The patterns of data which can be saved are as shown in the below table.

Setting	Welding current (Command value)	Welding current (Detected value)	Welding voltage (Command value)	Welding voltage (Detected value)	Wire feed speed (Command value)	Wire feed speed (Detected value)
0	-	-	-	-	-	-
1	-	Storable	-	Storable	-	Storable
2	Storable	-	Storable	-	Storable	-
3	Storable	Storable	-	Storable	-	-
4	Storable	Storable	-	-	-	Storable
5	-	Storable	Storable	Storable	-	-
6	-	-	Storable	Storable	-	Storable
7	-	Storable	-	-	Storable	Storable
8	-	-	-	Storable	Storable	Storable

For data log function; (☞ 7.3 Data Backup (Utilization of data)).

6.7.2.38 F53: Sampling speed of data log function

Selects the data sampling interval in using data log function.
The relationship between the setting value and the data sampling is as follows:

Setting	Sampling interval
1	10 ms
2	100 ms
3	1 s

For data log function; (☞ 7.3 Data Backup (Utilization of data)).

6.7.2.39 F54 Tack start process

This function enables to start the wire feeding speed with the normal feeding speed without slow-down after the welding completion. (Which enables the tack welding of less transition time)

- [ON]: Pressing the torch switch within 0.5 seconds after the welding completion can start it with the normal feeding speed. (The wire feeding speed at this time is not exceeding 5 m/min.)
- [OFF]: disables the function.

6.7.2.40 F55 to F58: Reserved

Used in connection with the automatic machines of other manufacturers.

6.7.2.41 F67: Setting change of current value (initial condition, crater condition)

When "CRATER ON" is selected, the current value of the initial condition and the crater condition can be set in percentage based on the current value of the welding condition.

- [ON]: enables the function.
  Set the current value of the initial condition with F68 and set the current value of the crater condition with F69.
- [OFF]: disables the function.

6.7.2.42 F68: Setting of current value (initial condition)

The current value of the initial condition can be set in percentage based on the current value of the welding condition.

- Setting range of current value (initial condition): 10 % to 300 %

6.7.2.43 F69: Setting of current value (crater condition)

The current value of the crater condition can be set in percentage based on the current value of welding condition.

- Setting range of current value (crater condition): 10 % to 300 %

6.7.2.44 F77: Welding result control function identification numbers

Sets the identification numbers of welding power source when using welding result control function. The identification number set in this function become the part of file name when backing up the data of welding result control function. (☞ 7.3.4 Welding Result Control Function)

- Setting range of identification number: 1 to 999.

6.8 Operation of Analog Remote Control (Optional)

This section explains the functions of knobs and buttons arranged for the analog remote controller (optional) as well as their operation.
Since the setting at the analog remote control is preferred when connected, it is not possible to set this condition on the operation panel of welding power source. (The initial condition and crater condition can be set on the operation panel.)

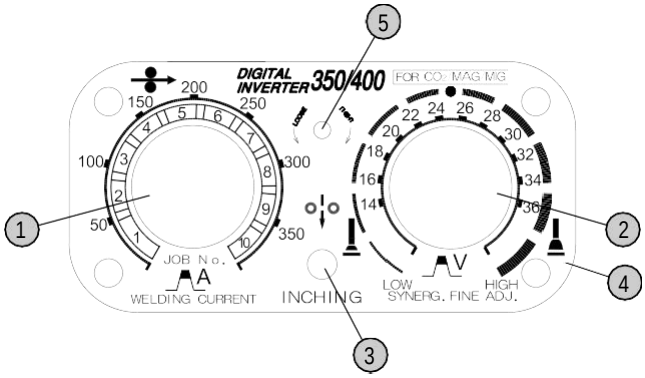

No.	Name	Function
1	Welding current adjustment knob	Set the welding current. The set value is displayed on the left digital meter at the welding power source side.
2	Welding voltage adjustment knob	Set the welding voltage. The set value is displayed on the right digital meter at the welding power source side. • < SYNERGIC adjustment > Optimum welding voltage according to the welding current is automatically set, and fine adjustment is available for the set welding voltage. Align the welding voltage adjustment knob to the center (" ● " mark), and adjust the voltage with the position as the standard. • < INDIVIDUAL adjustment > The welding voltage can be individually adjusted without being influenced by the welding current.
3	Inching button	Feeds the wire. (☞ 5.4 Wire Inching) During when the button is pressed, the wire feeding is carried out. Wire feed speed can be adjusted by the welding current adjustment knob while pressing the inching button.
4	Scale plate (*1)	Replace the scale plate for analog remote control (☞ 6.7.2.7 F9: Analog remote control scale) when using the optional analog remote control. Note that the scale of analog remote control as well as the scale plate to be used depends on the rated output current of the welding power source. (Above diagram shows an example with 350 A) • 350A: 350/200 • 500A: 500/350/200
5	Fixing screw	To replace the scale plate, turn the screw counter clockwise, and remove them.

*1: For adjustment of low current region when using a thin wire, etc., using the accessory scale plate with full scale of 200A allows fine adjustment. To use this scale plates, set the internal function F9 function. (☞ 6.7.2.7 F9: Analog remote control scale)

TIPS

- In connecting (or removing) the analog remote control to (or from) the welding power source, turn OFF the power switch of the welding power source.
- The analog remote control is automatically recognized after being connected to the analog remote control and turning ON the power switch.

Chapter 7 Administrator Functions

This chapter explains the functions used by administrators such as protection and initialization of welding conditions.

7.1 Protection of Welding Conditions

This section explains the protection function (password function) of welding conditions. When the function is enabled, ☞5.5.2 Preventing erroneous operation on operation panela password will be requested to disable the erroneous operation prevention function.
The erroneous operation prevention function prohibits the following operations to prevent accidental change of welding conditions.

- Setting welding conditions (Checking of settings is allowed)
- Operating the mode switching keys and the parameter adjusting knob

Functions such as gas check that do not affect the welding conditions will not be prohibited. The operations above will become possible if the erroneous operation prevention function is disabled.

NOTE

- **Write down the password on a piece of paper and store it safely.**
- **The current password will be requested also when you change it.**
- **If a password is set and the erroneous operation prevention function is enabled, the erroneous operation prevention function will not be disabled even if the power is turned off and on or if the welding conditions and internal functions are initialized.**
- **If the password is lost, please contact your dealer.**

7.1.1 Setting/Changing password

This section explains how to set and change the password.

- Welding is not possible during setting the password.
- Set a three-digit number other than "000" as the password. Setting "000" does not set a password. (No password specified)
- To change the password on the way, press the DISPLAY CHANGE key and move the digit position to the hundreds place.
- To cancel setting of the password, turn off the power switch.

NOTE

- **First determine a specified number and write it down on a piece of paper, and then set the number as the password having the paper at hand.**

STEP

1. **Turn off the power switch.**
2. **Press and hold the F (function) key and the ENTER key simultaneously and turn on the power switch.**

- Hold the two keys pressed down until "Loc" is displayed on the left digital meter. "PAS" -> "Loc" will be displayed in order.)
  Release the keys after "Loc" is displayed.
- If a password has already been set, "Loc" will flash. To change the password, delete the password with the operation from the step 2 of "7.1.2 Disabling erroneous operation prevention" and go to the next step. (☞ 7.1.2 Disabling erroneous operation prevention)
- If a password has not been set yet, "Loc" lights up. Check that "Loc" is not flashing before starting the next step.

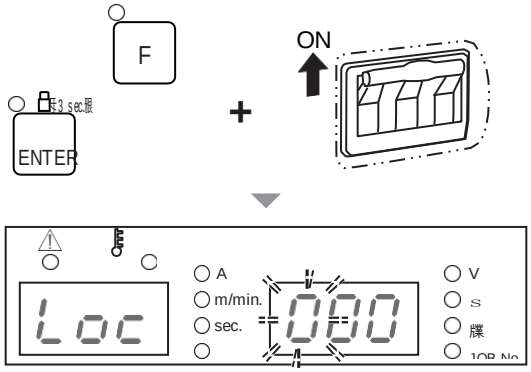

3. **Turn the parameter adjusting knob to set the hundreds place digit.**

- The hundreds place flashes on the right digital meter. Display the desired number and press the DISPLAY CHANGE key.
  Then the tens place will flash on the right digital meter.

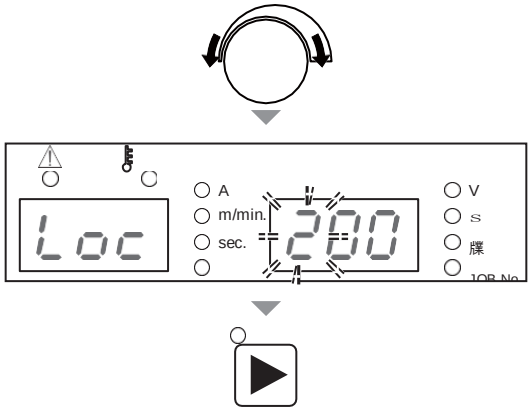

4. **Set the tens place digit and ones place digit in the same manner as the step 3.**
5. **Press the ENTER key.**

* The left and the right digital meters flash alternately.

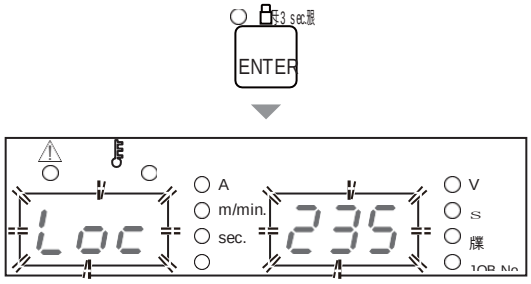

6. **Check that the password is correct and press the ENTER key.**

* The password has been set.

TIPS

- **After the password is set, if the ENTER key is pressed and held for three seconds or more, the LED of the ENTER key flashes and the erroneous operation prevention function becomes enabled. To disable the erroneous operation prevention function, the password will be requested.**

7.1.2 Disabling erroneous operation prevention

This section explains how to disable the password-protected erroneous operation prevention function.

- To change the password on the way, press the DISPLAY CHANGE key and move the digit position to the hundreds place.
- To cancel deleting the password, press and hold the F (function) key for one second or more.

STEP

1. **Press and hold the ENTER key for three seconds or more.**

   * "Loc" flashes on the left digital meter.
   ("PAS" -> "Loc" will be displayed in order.)

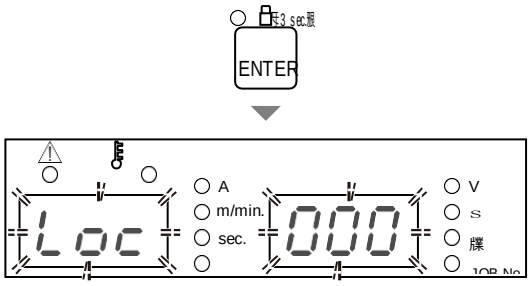

2. **Turn the parameter adjusting knob to select the hundreds place digit specified as password.**

   ● The hundreds place flashes on the right digital meter. Display the number specified as the password and press the DISPLAY CHANGE key.
   Then the tens place will flash on the right digital meter.

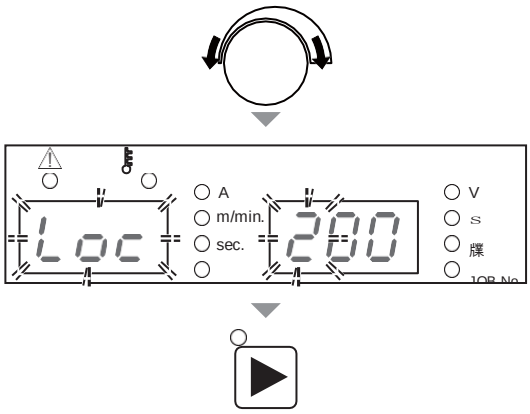

3. **Select the tens place digit and ones place digit in the same manner as the step 2.**
4. **Press the ENTER key.**

   * When the number matches the set password, "goo" / "d" are displayed on the left /right digital meters respectively and the lock will be released.
   * If the number does not match the set password, "bAd" is displayed on the left digital meter and the status returns to the step 2.

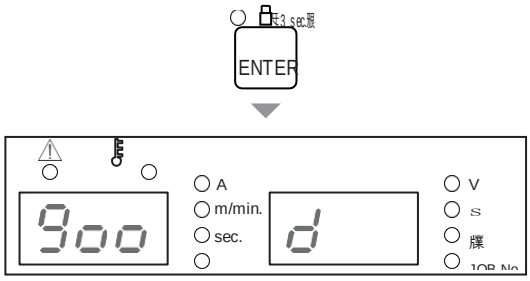

7.2 Welding Result Control Function

This section explains about the welding result control function. The function enables the management of the items below.

Welding control parameter	Monitor No.	Initial value	Setting range	Explanation
Number of welding point	P10	0	-	Cumulative number of welding points (number of times)
	P11	0	0 to 999	Target value of welding points (number of times)
	P12	0	0 to 5	Operation at the time when the target value of welding points is achieved
Wire consumption	P20	0.00	-	Cumulative wire consumption used in welding (kg)
	P21	0	0 to 999	Target wire consumption (kg)
	P22	0	0 to 5	Operation at the time when the target wire consumption is achieved
Total welding time	P30	0	-	Cumulative total welding time (minute)
	P31	0	0 to 999	Target total welding time (minute)
	P32	0	0 to 5	Operation at the time when the target total welding time is achieved
Welding monitor	P40	0	-	Max. fluctuation value of average range monitor (A or V)
	P41	100	0 to 100	Current tolerance (+) (%)
	P42	100	0 to 100	Current tolerance (-) (%)
	P43	100	0 to 100	Voltage tolerance (+) (%)
	P44	100	0 to 100	Voltage tolerance (-) (%)
	P45	0	0 to 100	WARNING judgment time (second)
	P46	0	0 to 2	Operation at the time of WARNING detection
Total operation time	P50	0.0	-	Cumulative total operation time (hour)
	P51	0.0	-	Cumulative total welding time (hour)
	P52	OFF	cLr/OFF	Clear the control data

Details of control contents (☞ 7.2.2 Details of welding control items)

7.2.1 Setting welding result control function

This section explains how to set the welding result control function.

STEP

1. **Press and hold the WELD MONITOR key for one second or more.**

   * The LED of WELD MONITOR key lights up.
   * The monitor No. is displayed on the left digital meter.
   * The data value specified for the monitor No. is displayed on the right digital meter.

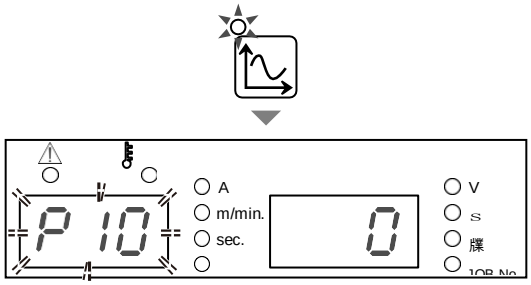

2. **With the parameter adjusting knob and the WELD MONITOR key, select the desired monitor No.**

- Turning the parameter adjusting knob will change the tens place digit of monitor No. (Example: "P10" -> "P20" -> "P30" -> "P40")
- Pressing the WELD MONITOR key briefly will change the ones place digit of monitor No. (Example: "P10" -> "P11" -> "P12")

* When an appropriate monitor No. is selected on the left digital meter, the right digital meter will flash.

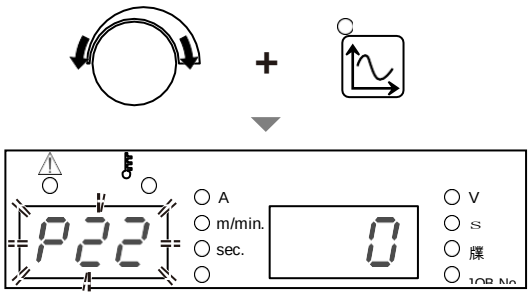

3. **Turn the parameter adjustment knob and change the setting value.**

* The set value is displayed on the right digital meter.

* To select another monitor No., press the WELD MONITOR key briefly and set the ones place digit to "0" on the left digital meter, and perform the step 2.

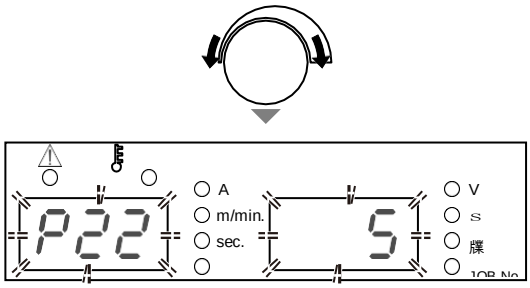

4. **Press and hold the WELD MONITOR key for one second or more.**

* The changed data values are saved and the LED of WELD MONITOR key lights off.

* When the set target is achieved or at the time of WARNING detection, an alarm will appear on the left / right digital meters. (☞ 7.2.2 Details of welding control items)

7.2.2 Details of welding control items

This section explains about details of the welding control items.

7.2.2.1 Number of welding point

The number of welding points is controlled according to the setting range.

- P10 (Cumulative number of welding points)
  The interval from the start of current flowing triggered by the torch switches ON to the stop of output triggered by the torch switch OFF is regarded as one count (one welding point) and accumulated.

  The setting range of count value is between 0 and 999. The count value will be cleared according to the "P12" setting. (If continuous operation is enabled, the value will be cleared when exceeding 999 and return to 0.)

- P11 (Target value of welding points)
  Select the target value of welding points in the range from 0 to 999. When the "P10" count value reaches the number of welding points specified here, an alarm appears indicating that the target is achieved.
  (☞ 7.2.2.6 Alarm indication when target is achieved)

- P12 (Operation at the time when the target value of welding points is achieved)
  Select the operation from 0 to 5 for the time when the target specified for "P11" is achieved. The set values and operations when the target is achieved are as below.

Operation	Set value					
The count value is cleared when the target is achieved (*1)	Yes	No	Yes	No	No	No
Operation is continued after the target is achieved (*2)	Enable	Enable	Enable	Enable	Disabled	Disabled
The count value is cleared when the power is turned on	Yes	Yes	No	No	Yes	No

*1: When an alarm is displayed, pressing any key of the operation panel can also clear the count value.

*2: If "Disabled" is selected and the target is achieved, next welding cannot start until any key on the operation panel is pressed.

7.2.2.2 Wire consumption

Wire consumption is controlled according to the setting range.

- P20 (Cumulative wire consumption used in welding)
  Wire consumption (kg) used in welding is measured and counted.

  The setting range of count value is between 0 and 999 kg. The count value will be cleared according to the "P22" setting.
  (If continuous operation is enabled, the value will be cleared when exceeding 999 and returns to 0.)

TIPS

- **Approximate wire consumption will be obtained with the wire consumption control function.**
  The table below shows the wire unit amount (g/m) calculated from the specific gravity (g/cm³) of the wire material. Wire consumption is calculated based on the unit amount and the wire feeding amount during welding. Therefore, there will be differences between the actual consumption and the calculated value depending on the wire constituents.
- **When wire consumption is 100 kg or lower, the value after the decimal point is also displayed.**
- **The wire consumption used in inching or wire slowdown is not measured.**
- **Special wires not listed in the table below are not measured.**

Wire diameter (mm)	Unit amount (g/m)		
	Mild steel solid	Stainless steel	Cored
0.6	2.2	-	-
0.8	3.9	4.0	-
0.9	5.0	5.1	4.2
1.0	6.2	6.3	-
1.2	8.9	9.0	7.4
1.4	12.1	-	10.1
1.6	15.8	15.9	13.2

- P21 (Target wire consumption)
  Select the target value of wire consumption in the range from 0 to 999 kg.
  When the "P20" count value reaches the wire consumption specified here, an alarm appears indicating that the target is achieved. (☞ 7.2.2.6 Alarm indication when target is achieved)

- P22 (Operation at the time when the target wire consumption is achieved)
  Select the operation from 0 to 5 for the time when the target specified for "P21" is achieved.
  The set values and operations when the target is achieved are the same as those of the "P12" function. "P12 (Operation at the time when the target number of welding points is achieved)" (☞ 7.2.2.1 Number of welding point)

7.2.2.3 Total welding time

The total welding time is controlled according to the setting range.

- P30 (Cumulative total welding time)
  Every interval from the start of current flowing triggered by the torch switch ON to the stop of output triggered by the torch switch OFF is counted and accumulated as welding time.

  The setting range of count value is between 0 and 999 minutes. The count value will be cleared according to the "P32" setting. (If continuous operation is enabled, the value will be cleared when exceeding 999 and returns to 0.)

- P31 (Target total welding time)
  Select the target value of total welding time in the range from 0 to 999 minutes.
  When the "P30" count value reaches the total welding time specified here, an alarm displays indicating that the target is achieved. (☞7.2.2.6 Alarm indication when target is achieved)

- P 32 (Operation at the time when the target total welding time is achieved)
  Select the operation from 0 to 5 for the time when the target specified for "P31" is achieved.
  The set values and operations when the target is achieved are the same as those of the "P12" function. "P12 (Operation at the time when the target number of welding points is achieved)" (☞ 7.2.2.1 Number of welding point)

7.2.2.4 Welding monitor

Average current /voltage during welding is monitored. When it exceeds the range specified here, an alarm displays and the output stops.

- P40 (Max. fluctuation value of average range monitor)
  If the average current /voltage (per second) becomes out of the allowable tolerance range specified in "P41" to "P44", an alarm is displayed indicating the following. (☞ 7.2.2.7 Alarm indication at the time of WARNING detection (Welding Monitor "P45" "P46"))

If the current is out of the range	: Difference (A) between the set value and the average value of welding current
If the voltage is out of the range	: Difference (V) between the set value and the average value of welding voltage
If both the current and voltage are out of the range	: Difference of either value which is more largely out of the range than the other

- P41 (Current tolerance (+))
  P42 (Current tolerance (-))
  P43 (Voltage tolerance (+))
  P44 (Voltage tolerance (-))
  Select the allowable tolerance range from 0 to 100 % in relation to the set values of welding current / voltage.

  Example: The "P41" to "P44" settings when the set value of welding current is 200A and that of welding voltage is 20 V.

  P41 (Current tolerance (+)) is set to "10" % (= 220A)
  P42 (Current tolerance (-)) is set to "20" % (= 160 A)
  P43 (Voltage tolerance (+)) is set to "20" % (= 24 V)
  P44 (Voltage tolerance (-)) is set to "10" % (= 18 V)

  In the example above, the allowable tolerance range of welding current is 160 to 220 A and that of welding voltage is 18 to 24 V.

- P45 (WARNING judgment time)
  Select the time to judge the event as an error in the range from 0 to 100 seconds when the average current / voltage (average per second) during welding is out of the allowable tolerance range.
  When the out-of-range state becomes longer than the time specified here, an alarm display. (☞ 7.2.2.7 Alarm indication at the time of WARNING detection (Welding Monitor "P45" "P46"))

  If "0" is set, WARNING detection will not be performed.

- P46 (Operation at the time of WARNING detection)
  Select the operation at the time of WARNING detection from 0 to 2.
  The set values and operations at the time of WARNING detection are as below.

Set value	Operation
0	Alarm indication only. Welding can continue. (Continuous operation is possible)
1	The ongoing welding can continue. After the welding is finished, next welding cannot start until any key of the operation panel is pressed. (Continuous operation is not possible)
2	Welding stops immediately. Next welding cannot start until any key of the operation panel is pressed. (Continuous operation is not possible)

7.2.2.5 Total operation time

Total operation time and total welding time are controlled according to the setting range.

- P50 (Cumulative total operation time)
  The operation time of welding power source is counted at all time and accumulated as total operation time.
  The setting range of count value is between 0 and 999 hours. The time between 0 and 99.9 hours are displayed in the unit of 0.1 hour and the time exceeding 100 hours is displayed in the unit of 1 hour. Refer to P52(Clear the control data) about how to clear the "P50".

- P51 (Cumulative total welding time)
  Every interval from the start of current flowing triggered by the torch switch ON to the stop of output triggered by the torch switch OFF is counted and accumulated as welding time.
  The setting range of count value is between 0 to 999 hours, The time between 0 and 99.9 hours are displayed in the unit of 0.1 hour and the time exceeding 100 hours is displayed in the unit of 1 hour. The count value of "P51" will not be cleared according to the "P32" setting. Refer to P52 (Clear the control data), about how to clear "P51".

- P52 (Clear the control data)
  Clear the various control data. After setting the setting value of P52 to "cLr", finish the "welding control" setting with pressing the " Welding control" key for one second or more. Then, the control data shown below will be cleared.

  P10 (Cumulative Number of welding)
  P20 (Cumulative wire consumption used in welding)
  P30 (Cumulative total welding time)
  P50 (Cumulative total operation time)
  P51 (Cumulative total welding time)

7.2.2.6 Alarm indication when target is achieved

When any of the number of welding points, wire consumption and total welding time reaches the target specified, its corresponding control No. will flash.

- In the right example, the control No. "P20" flashes on the left digital meter and the specified value "910" on the right digital meter.
- The display returns to the normal state when any key of the operation panel is pressed.
- If continuous operation is enabled in the setting of the operation for the time when the target is achieved, an alarm will display every time welding finishes until any key of the operation panel is pressed.

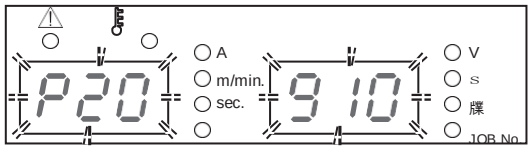

<Example> When wire consumption reached the target value

7.2.2.7 Alarm indication at the time of WARNING detection (Welding Monitor "P45" "P46")

If the average current or average voltage becomes out of the specified range, the difference between the average value and the specified value will flash.

- The right example shows a current error. The control No. "P40" flashes on the left digital meter and the difference between the average value and specified value "30" on the right digital meter, with the "A" LED lighting.

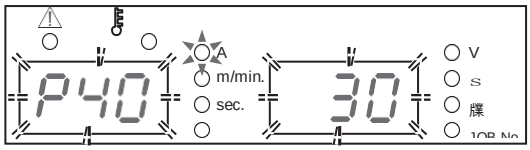

<Example> While welding is conducted with the welding current 200A/Current tolerance (+) 10% (= 220A), the average current during welding rose to 230A and the WARNING judgment time specified in "P45" elapsed.

- The right example shows a voltage error. The control No. "P40" flashes on the left digital meter and the difference between the average value and specified value "1.5" on the right digital meter, with the "A" LED lighting.
  In case of voltage error, the difference between the average voltage and specified voltage is displayed in one decimal place.
- The display returns to the normal state when any key of the operation panel is pressed.
- If continuous operation is disabled ("1" or "2" is selected) in the "P46" setting, next welding cannot start until any key of the operation panel is pressed.

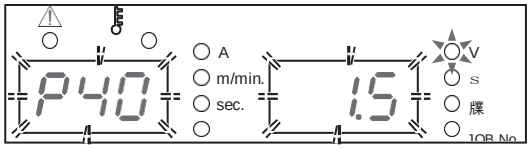

<Example> While welding is conducted with the welding voltage 15V/Voltage tolerance (+) 0% (= 15V), the average voltage during welding rose to 16.5V and the WARNING judgment time specified in "P45" elapsed.

Chapter 8 Maintenance and Inspection

This chapter explains the daily and periodical inspection of the welding power source.

8.1 Precautions for Maintenance and Inspection

This section explains the precautions for maintenance and inspection work.

To prevent electric shock or burn injury, ensure to follow the instructions below:

⚠ WARNING

- Do not touch the input and output terminals and the internal live electrical parts of the welding power source.
- Perform periodical maintenance and repair damaged parts if any before use.
- Maintenance, inspection and repair should be performed by qualified persons or persons familiar with the Welding power source.
- Before starting maintenance and inspection, make sure to cut the input power with the disconnect switch in the box connected with the welding power source and wait three minutes or more.
  The capacitors may be still charged even after the input power is cut. Make sure that there is no charged voltage before starting the work.
- During maintenance and inspection, take an appropriate measure to prevent turning on the input power.
  Special attention is necessary because the welding power source contains many parts connected to the input side due to its high-frequency inverter method.
- Periodically blow the parts of welding power source with dry compressed air to remove dust.
  Powder dust accumulating inside may cause insulation deterioration, resulting in electric shock or fire.

⚠ CAUTION

- Before maintenance and inspection, wait until the temperature inside the welding power source becomes low.
  The main circuit parts such as DC reactor and heat sink are hot just after welding. Touching them accidentally may cause burn injury.

To prevent being caught / pinched by the rotating parts, ensure to follow the instructions below:

⚠ WARNING

- Removing the cases for maintenance, inspection or repair should be performed by qualified persons or persons familiar with the Welding power source. Also put up a barrier around the Welding power source or take other necessary measure to prevent other people from getting in the nearby area.
- Keep your hands, fingers, hairs and clothes away from the rotating cooling fan and the open parts around the cooling fan;

To prevent damage and problem of the welding power source and loss of the data, ensure to follow the instructions below:

⚠ CAUTION

- The welding conditions (electronic data) stored by this function are susceptible to occurrence of static electricity, impact, repair, etc., and there is a possibility that the stored contents may be changed or lost. Important information should also be stored as printed document.
  Please note that Gedik Welding will not be liable for any alteration or loss of electronic information.
- When cleaning the welding power source, do not expose the cooling fan directly to compressed air.
  Otherwise powder dust may get inside the cooling fan. Also the cooling fan may rotate at high speed due to compressed air, resulting in wearing of the bearing.
- When using a vacuum cleaner to remove powder dust accumulating on the welding power source, do not vacuum between the rotating part of cooling fan and the main body.
  Otherwise lubricant of the bearing of cooling fan may also be removed, resulting in failure or shorter service life of the cooling fan.

8.2 Daily Inspection

This section explains the daily inspection of the welding power source. Perform daily inspection for the following items in the table.

Front and rear panel of the welding power source is made from polycarbonate resin. To prevent from electric shock or fire caused by the damage on polycarbonate resin, ensure to follow the instructions below.

⚠ WARNING

- **Before performing daily inspection, refer to " 8.1 Precautions for Maintenance and Inspection.**
- **If there is dirt on plastic parts, soak a soft cloth in water, alcohol or neutral detergent, wring it well and wipe off the dirt.**
  Do not use organic detergent or chemical agent. Doing so may cause crack (breaking) and degrade the strength.
- **If there is any abnormality in the plastic parts such as front and rear panels, immediately stop the use and contact your dealer.**

Daily inspection item	Content
Status of the grounding cable	• Check that the grounding terminal on the back of the welding power source is securely grounded. (If it is not grounded, electric shock/failure/malfunction may occur.)
Status of cables (Primary power cable for facility side, cables for base metal side/torch side, torch cable, voltage detection cable, etc.)	• Check that there is no abnormal heat generation in cable connections. • Check that cable connections are not loose. • Check that there is no problem in the insulation method between the cables and base metal. • Check that cables are not cut or damaged.
Appearance of the welding power source	• Check that there is no abnormality such as crack in plastic parts of the welding power source.
Noise/vibration/odor generated from the welding power source	• Check that there is no sound of metal, abnormal vibration or burnt odor inside the welding power source.
Status of the cooling fan	• Check that the cooling fan smoothly rotates when the power switch is turned on. (There should not be sound of metal, abnormal vibration or burnt odor.) While the cooling fan is rotating, air is ventilated from the slits on the front and rear of the welding power source.
Status of the operation panel/torch switch	• Check that the keys on the operation panel and the torch switch work normally.
Status of the primary power voltage for facility side	• Check that there is not large fluctuation in the primary power voltage.

8.3 Periodical Inspection

This section explains the periodical inspection of the welding power source. Check the items in the table below every three (3) to six (6) months.

⚠ WARNING

- Before performing maintenance and inspection, read the instructions in "8.1 Precautions for Maintenance and Inspection" and "8.2 Daily Inspection".

Periodical inspection item	Inspection work
Grounding wire Each cables (Primary power cable for facility side, cables for base metal side/torch side, torch cable, voltage detection cable, etc.)	• 8.2 Daily Inspection Refer to the description for the same item in "8.2 Daily Inspection".
Welding torch	• Check that there is no deterioration, damage or other abnormality in consumable parts of the welding torch. Abnormality in consumable parts can prevent smooth wire introduction.
Cleaning inside the welding power source	• Blow with dry compressed air from the front slit (ventilation hole) to the back side to remove dust inside the welding power source. Dust accumulating on the heatsink of transistor and rectifier may prevent heat radiation, adversely affecting the transistor. Also, accumulation of dusts between the winding of transducer could deteriorate insulation. 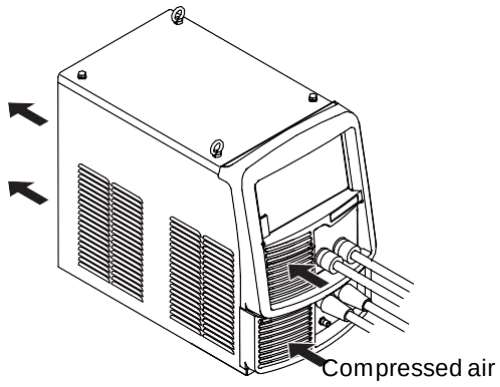
Cleaning inside the welding power source (When an abnormal temperature error code is displayed)	• Dust accumulating on the fin or winding of heat sink can cause insufficient heat radiation. Remove the left side panel and fan frame and check the the dirt inside. If there is heavy dirt, blow the fin and coils of heat sink directly with compressed air to remove dust inside. 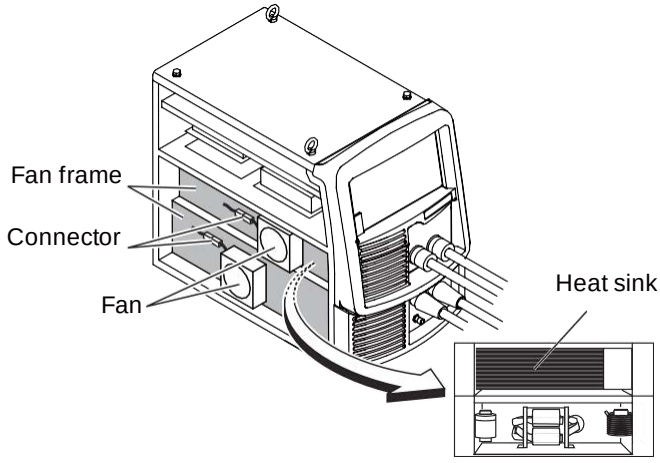

8.4 Periodical Replacement Parts

This section explains the parts to be replaced periodically.

- Printed circuit board PCB7 (☞ 10.1 Parts List)
  The printed circuit board PCB7 inside the welding power source has a high voltage electrolysis capacitor. The high voltage electrolysis capacitor supplies stable direct current to the inverter circuit, but its performance will degrade year by year.

  If the printed circuit board PCB7 is used for an extended period without being replaced, it may result in performance degradation of the welding power source and damage of the high voltage electrolysis capacitor or other parts.
  It is recommended to replace the printed circuit board PCB7 every five years.

  For replacement of the printed circuit board PCB7, contact your dealer.

  ⚠ CAUTION

  - **Even if the part is replaced by the user, please contact your dealer.**
  - **When inserting the connector to the printed circuit board, check that the number printed on the printed circuit board is the same as the number indicated on the connector, and insert firmly to the end.**
  - **Do not turn on the power switch of welding power source when the connector of printed circuit board is disconnected.**

- Others
  Fan, relay, and rated power supply has a certain lifetime; they are recommended to be replaced once in approximately five years.
  When replacement of fan, relay, and rated power supply is necessary, please contact your dealer.

8.5 Insulation Resistance Measurement and Withstand Voltage Test

If insulation resistance measurement and withstand voltage test is necessary, please contact your dealer.

⚠ WARNING

- **The customer MUST NOT perform the withstand voltage test. If withstand voltage test is necessary, ensure to contact your dealer.**
- **Insulation resistance measurement should be conducted by qualified persons or persons familiar with the welding machine. Also, fence and other neccessary measures should be taken around the welding machine to prevent other people from getting in the nearby area.**

⚠ CAUTION

- **Conducting insulation resistance measurement by customer may result in injury or equipment failure. For insulation resistance measurement, be sure to ask your dealer.**

- When measuring insulation resistance and testing withstand voltage, follow the steps below.
  Refer to the schematic diagram, parts layout, and parts list for maintenance.
  - Disconnect the input power cable and grounding cable from the disconnect switch and short-circuit the input terminal.

- Short-circuit the positive (+) and the negative (-) sides of the output terminal.
- Unground all the case grounding cables (line No.80, total of 6 positions) and insulate them with insulation tape.
- For DR1, short-circuit the AC side and positive (+) output side and the AC side and negative (-) output side respectively.
- For DR2, short-circuit between the anode and the cathode.
- For DR4, short-circuit between the anode and the cathode.
- Short-circuit between TR1 (C1) and (E1C2), TR1 (E1C2) and (E2), TR3 (C2) and (E2).
- Apply NF.
- After finishing insulation resistance measurement, return the above to the original state.

⚠ CAUTION

- **After finishing insulation resistance measurement, it is necessary to remove the shortcircuit cables and return the welding power source to the original state.**
  If the power is turned on without returning it to the original state, the welding power source will burn out.

Chapter 9 Troubleshooting

This chapter explains the typical troubleshooting for the welding power source.

The cause of problems can be categorized as below:

- Mechanical problems (e.g., problems of driving mechanism of the wire feeder)
- Electric and control problems
- Operational errors

A problem may become complicated as a result of mix of multiple causes. If a problem has occurred in the welding power source, it is necessary to identify its cause and address it appropriately.

For question concerning problems, contact your dealer.

9.1 Action in Case of Error

This section explains the causes of abnormalities and how to cope with them in case of lighting/flashing of the "WARNING" LED and "Temperature WARNING" LED on the operation panel.
If any error occurs in the welding power source, the operation panel will indicate it as below:

- The "WARNING" LED and the "Temperature WARNING" LED light/flash
- An error code flashes on the left/right digital meters

The welding power source may stop or may not stop output depending on the type of error code. The meanings of (*1) and (*2) in the table below are as follows.

- *1: When the error occurs, the welding power source stops the output.
- *2: Even when the error occurs, the welding power source does not stop the output. To stop the output, set the internal function F19 to "ON". (☞ 6.7.1 Setting procedure)
  Details on the internal function F19 (☞ 6.7.2.15 F19: Switching alarm setting)

Check the error code displayed and take an appropriate action according to the table below.
(If the welding power source is combined with robots manufactured by Gedik Welding, see the instruction manual of the robot controller.)

⚠ WARNING

- **Before inspecting the welding power source, make sure to read "8.1 Precautions for Maintenance and Inspection".**

⚠ CAUTION

- **If an error code not listed in the table is displayed, write it down on paper, turn off the power switch and contact your dealer.**
  Do not turn on the power switch because it may indicate a serious problem of the welding power source.

NOTE

- **When a warning occurs while using a water-cooled welding, a water-cooled pump is operated.**

Error code		Error cause	Action and how to cancel error
E-	000	There is no load between the STOP terminals (*1)	• Identify the cause of no load between the STOP terminals (3-4) of the terminal block TM3 for external connection. • How to clear the error code indication differs depending on the setting of internal function F4. (☞ 6.7.2.2 F4: Auto/Semi-auto mode)
E-	010	The torch switch was on when the power switch was turned on (*1)	• Check that the torch switch is not on (not pressed). • If the internal functions F29 to F32 are set to "4" (activate), check also the connections of the terminal blocks for external connection. (☞ 6.7.2.22 F29 to F32: External input terminal setting) • The error code will disappear when the status above is resolved.
E-	020	Inching was active when the power switch was turned on (*1)	• Check that the WIRE INCH key (or inching button) is not pressed. • If the internal functions F29 to F32 are set to "2" (inching), check also the connections of the terminal blocks for external connection. (☞ 6.7.2.22 F29 to F32: External input terminal setting) • The error code will disappear when the status above is resolved.
E-	030 to 037	Installing the software from a USB flash drive failed (*1)	• Check that the USB flash drive is normal and connected to the USB connector correctly, and try installing again. • The error code will disappear when the power switch is turned off.
E-	100	Error of control power (*1)	• If cables are drawn out of the welding power source, check that there is no abnormality (e.g., short-circuit) in the cables. • The error code will disappear when the power switch is turned off.
E-	150	The input voltage for primary side exceeded the allowable range (*1)	• Check that the input voltage for primary side is between 340 to 460 V. • The error code will disappear when the power switch is turned off.
E-	160	The input voltage for primary side fell below the allowable range (*2)	• Check that the input voltage for primary side is between 340 to 460 V. • Check the set value of internal function F20. (☞ 6.7.2.16 F20: Low input voltage detection level) • The error code will disappear when the power switch is turned off.
E-	210	The arc voltage was not detected (*1)	• Check that the power cables such as cables for base metal side and torch side and the voltage detection cable are not disconnected. • The error code will disappear when the power switch is turned off.
E-	301 to 303	The temperature inside the welding power source exceeded the allowable range (*1)	• Leave it untouched (with the power on) and operate the cooling fan for 10 minutes or more, and then turn off the power. • After the above, clean dusts inside the welding power source. (☞ 8.3 Periodical Inspection) • The error code will disappear when the power switch is turned off. • After recovery, be careful not to exceed the rated duty cycle.
E-	310 311 313	Rotation problem of the cooling fan (*2)	• Clean dusts inside the welding power source. (☞ 8.3 Periodical Inspection) (Cooling fan may not work normally due to powder dust or foreign matter.) • If the problem persists, the cooling fan may be broken. Contact your dealer. • The error code will disappear when any key of the operation panel is pressed.
E-	510	Water-cooled pump abnormally (*1)	• Check for water leakage from the cooling water hose and ensure that sufficient cooling water is available. When using the air-cooled torch, check that LED of the TORCH key on the operation panel is off.
E-	615	Error of the backup memory data (*2)	• The error code will disappear when any key of the operation panel is pressed. • At the time, the welding conditions specified/registered and the settings of internal functions may be initialized. After the error is cleared, check that there is no problem in the data.

Error code		Error cause	Action and how to cancel error
E-	700	An over current was detected at the output side of the welding power source (*1)	• Check that the chip at the end of torch is not contacting the base metal. • Check that the power cables such as cables for base metal side and torch side are not short-circuited. • The error code will disappear when the power switch is turned off.
E-	710	The phase W of input voltage for primary side is not connected (*1)	• Check that there is no problem in input voltage for primary side and in cable wiring. • The error code will disappear when the power switch is turned off.
E-	800 801	The rotation rate of the motor of wire feeder was not detected (*1)	• Check that there is no disconnection, short-circuit or other abnormalities in the cables connecting the wire feeder. • Check that there is no problem in the wire feeder. • The error code will disappear when the power switch is turned off.
E-	810	The temperature of the governor circuit exceeded the allowable range (*1)	• Check that the wires are not stuck or there are no other abnormalities in the welding torch or wire feeder. • The error code will disappear when the power switch is turned off. • The "E-820" indication will disappear when any key of the operation panel is pressed.
E-	820	The current in the wire feeder motor exceeded the warning level (*2)	
E-	830	The current in the wire feeder motor exceeded the WARNING detection level (*1)	
E-	951	There is a duplicate ID on a single bus (*1)	• Turn off the power switches of all other CAN-connected welding power sources, then turn on the power switches and check the setting of internal function F43. (☞ 6.7.2.30 F43: CAN ID) • The error code will disappear when the power switch is turned off.

9.2 Troubleshooting

This section explains the typical problems other than the error codes, their causes, and how to cope with them.
Check the table below before requesting repair service.

⚠ WARNING

- Before inspecting the welding power source, make sure to read "8.1 Precautions for Maintenance and Inspection".

No.	Problem	Possible cause	Corrective action
1	The power switch has tripped.	Leak has occurred in the welding power source.	DO NOT turn on the power switch. Contact your dealer.
2	The power LED switch does not light even when the power switch is turned on.	The primary power source is not supplied.	Supply the primary power source between 340 to 460 V.
3	Nothing is displayed on the left/ right digital meters even when the power switch is turned on.		
4	"Temperature WARNING" LED lights and an error code is displayed when the power switch is turned on.	The protection circuit has been activated due to temperature error.	Leave it untouched (with the power on) and operate the cooling fan for 10 minutes or more, and then turn off the power. After the above, clean dusts inside the welding power source. (☞ 8.3 Periodical Inspection)
5	Shielding gas is not flowing.	The valve of gas cylinder is closed.	Open the gas valve.
		The pressure of gas cylinder is insufficient.	Replace the gas cylinder.
		Setting/handling of the external inputs is not correct.	Check that the setting of internal functions F29 to F32 is correct. (☞ 6.7.2.22 F29 to F32: External input terminal setting)
		The external input cables are disconnected/short-circuited.	Check that there is no abnormality in the cables connected to the external input terminal block. If any, repair/replace the cables.
6	Shielding gas does not stop flowing.	Setting/handling of the external inputs is not correct.	Check that the setting of internal functions F29 to F32 is correct. (☞ 6.7.2.22 F29 to F32: External input terminal setting)
		The external input cables are disconnected/short-circuited.	Check that there is no abnormality in the cables connected to the external input terminal block. If any, repair/replace the cables.
7	Arc does not generate even when the setting of welding conditions is correct. (w/o no-load voltage)	Connection of the torch cable is loose.	Securely connect the torch cable.
		The torch switch is broken.	Check that the torch switch works normally.
8	Setting of current/voltage is not possible.	The automatic machine mode is selected.	Check that the setting of internal functions F4 is correct. (☞ 6.7.2.2 F4: Auto/Semi-auto mode)
		An analog remote control (optional) is connected.	When an analog remote control (optional) is connected, the setting of the remote control has priority.
		The encoder is broken.	The printed circuit board PCB2 (P30086R00) needs to be replaced. Contact your dealer.
9	The mode does not change even when the CRATER-FILL key is pressed. (The LED position does not change.)	The internal function F4, F48 or F51 is set to "ON".	Turn the settings to "OFF".

No.	Problem	Possible cause	Corrective action
10	The welding conditions cannot be set with the operation panel. The welding mode does not change even when switched with the operation panel.	The erroneous prevention function to prevent malfunction of the operation panel is enabled. (Erroneous operation prevention function)	Press and hold the ENTER key three seconds or more to disable the erroneous operation prevention function the operation panel.
11	Arc is unstable.	The setting of welding mode is not correct.	Check the settings of wire diameter, wire materials and shielding gas.
		The wire is defective or there is a failure in wire feeding.	Check that there is no problem in the wire or wire feeder. (☞ 5.2 Check before Welding)
		Connection of the voltage detection cable is not correct.	Check that connection of the voltage detection cable is correct.
		There is noise in the voltage detection cable.	Adjust the arc characteristics to the plus side.
12	Wire is not fed (no error code is displayed).	The pressure roll of wire feeder came off.	Set correctly the pressure roll of wire feeder. (For setting, see the instruction manual of the wire feeder.)
		There is an abnormality in cables of the wire feeder.	Check that there is no abnormality in cables of the wire feeder.
13	There are blowholes.	There is a problem in the shielding gas.	Check that there is no abnormality in the gas cylinder or gas hose.
		The chip of the welding torch wore out.	Replace the chip.
14	Continuous output of the WCR signal is shown on the monitor of the robot. (The WCR signal is used for communicating with the robot to check the presence of the welding current.)	The WCR relay of welding power source is broken.	The WCR relay on the printed circuit board PCB1 (P30099P00) needs to be replaced. Contact your dealer.
15	The password is lost.	-	Contact your dealer.

Chapter 10 Reference Materials

This chapter contains the parts list of welding power source, and reference materials for setting the welding conditions.

10.1 Parts List

This section shows the parts list of welding power source.

- When placing an order, provide your dealer with the necessary information: the model name of welding power source, the name of the part to be replaced, and the part number (or specifications if part has no number).

  The period of supplying parts will be at the shortest approximately seven years after the welding power source is manufactured. It may change, however, if the parts from other companies cannot be supplied.

- The codes in the table correspond to those in the schematic diagram/parts layout drawing.

Code	Part No.	Product Name	Specifications	Q'ty	Remarks
NF	100-1568	Circuit protector	CA3-X0-19-177-41D-C	1	
PL1	100-0171	Pilot lamp	N46010A7KW-01 ROHS	1	
DR1	4531-716	DR / SCR complex module	DFA100BA160	1	
DR2 to 6,8	4531-119	Diode module	DSEI 2X101-06A	6	
DR7	4531-505	Diode	S2L60	1	
DR9	4531-710	Diode	D1N60	1	
TR1 to 4	100-1999	IGBT module	CM150DUS-12F	4	
TR5,6	100-1428	IGBT module	FZ400R12KP4	2	
SCR1	4530-412	Thyristor	SG25AA60	1	
CT1	4810-030	Current transformer	W-W03029	1	
CT2	100-0956	Hall current detector	CS-40GEH	1	
T1	P30086B00	Inverter transformer	P30086B00	1	
T2	W-W03674	Auxiliary transformer	W-W03674	1	
LF1	100-2233	EMI FILTER	TAC-30-683	1	
L1	P30086L00	Input reactor	P30086L00	1	
L2	P30086C00	DC reactor	P30086C00	1	
L3,11	4739-497	Ferrite core	E04RA400270150	2	
L4,5	4739-543	Ferrite core	E04RA310190100	2	
L6	100-0620	Ferrite core	SN-20 OR23.5×9.5×12.6	2	
L7	4739-497	Ferrite core	E04RA400270150	2	
L8	100-0620	Ferrite core	SN-20 OR23.5×9.5×12.6	3	
L9	100-0618	Ferrite core	HM2AT4815	1	
L10	4739-497	Ferrite core	E04RA400270150	2	
L12	100-0618	Ferrite core	HM2AT4815	1	
L13	4739-497	Ferrite core	E04RA400270150	2	
THP1	4614-051	Thermostat	67L090	1	
THP2	100-0123	Thermostat	US-602SXTTAS 130 ℃	1	
FM1,2	100-1429	FAN	9WV1224P1H003	2	
FM4	100-1825	FAN	9G1224E1D07	1	
CR1	4341-139	Relay	G2R-1-T DC24V	1	
SH	4403-116	Meter shunt	SH 400A/60mV	1	
R1 to 4	6100-052	Surge absorber	TND14V-911KB0LLAA0	4	
R5 to 10	100-0234	Carbon resistor	RD20S 1 KΩJ	6	
R11,12	100-1430	Metal film resistor	RPM200Z 5Ω	2	
R13,14	4508-317	Metal film resistor	RD1/2W 3kΩJ	2	
R15a,b	100-1431	Winding resistor	SMR 220W 1.6Ω	2	
R16	4509-916	Cement resistor	T20SH 2.2ΩJ	1	

Code	Part No.	Product Name	Specifications	Q'ty	Remarks
R17	4509-704	Carbon resistor	RD1/4W 1KΩJ	1	
R18	100-0662	Thermistor	EC2F103A2-40113	1	
R19a, b	100-1432	Winding resistor	FHN50 471J/RO	2	
R20,21	100-0234	Carbon resistor	RD20S 1KΩJ	2	
R22	100-1571	Winding resistor	CS1P 100ΩJ	1	
R23	4509-918	Cement resistor	40SH 200ΩJ	1	
R24	4509-704	Carbon resistor	RD1/4W 1KΩJ	1	
R25,26	4509-905	Cement resistor	MHR20A513J1	2	
C5,6	100-1434	Film capacitor	FHC(180)2000V682J	2	
C7	100-0227	Film capacitor	0.47μF 50V	1	
C8	4511-512	Electrolysis capacitor	LQA2C222MSMEZ0	1	
C9	100-1712	Film capacitor	FHC(180)2000V103J	1	
C10	100-0227	Film capacitor	0.47μF 50V	1	
C11,12	4517-459	Ceramic capacitor	DEHR32E103KA2B	2	
C13,14	4517-459	Ceramic capacitor	DEHR32E103KA2B	2	
CON1	100-1435	Receptacle	DPC25-10BP	1	
CON2	4730-010	Receptacle	DPC25-6BP	1	
CON3	4730-192	Receptacle	VLP-03V	1	
TM5	4739-141	Terminal	T-3 (Black)	1	
TM6	100-2234	Terminal	DG15HS-1.2-04P-17-100A(H)	1	
DCV1	K5791B00	Power supply	K5791B00	1	Output DC24V
DCV2	K5791C00	Power supply	K5791C00	1	Output DC48V
PCB1	P30099P00	Printed circuit board	P30099P00	1	(*1)
	4341-206	Relay	G6A-274P DC24V	1	With PCB1
PCB2	P30086R00	Printed circuit board	P30086R00	1	
	100-1421	Encoder	EVEGA1F2524B	1	With PCB2
PCB3	P30133Q00	Printed circuit board	P30133Q00	1	
PCB4	P30087Q00	Printed circuit board	P30087Q00	1	
PCB5	P30086V00	Printed circuit board	P30086V00	1	
PCB6	P30086V00	Printed circuit board	P30086V00	1	
PCB7	P30133M00	Printed circuit board	P30133M00	1	
PCB8	P30086T00	Printed circuit board	P30086T00	1	
PCB9	P30087T00	Printed circuit board	P30087T00	1	
PCB10	P30086S00	Printed circuit board	P30086S00	1	
PCB11	P30088V00	Printed circuit board	P30088V00	1	
(1)	P30086G01	Mold cover	P30086G01	1	Upper side cover
(2)	P30086G02	Mold cover	P30086G02	1	Under side cover
(3)	P30133W02	Operation panel sheet	P30133W02	1	
(4)	W-W03636	Cap	W-W03636	1	For P30086G01
(5)	4734-007	Socket	DIX BE 50-70	2	
(6)	100-1436	Handle cover	DCP73BH 3POLE H(HANDLE COVER)	1	For NF
(7)	4739-476	Cap	W-W02814	2	For CON1,2
(8)	4735-038	Knob	K-100 22RSB	1	Parameter adjustment knob
(9)	4735-039	Cap	K-100 22CSBL	1	
	4739-475	Rubber foot	C-30-RK-3220	4	
	4739-599	Perfect lock	JPG-16B	1	

*1: When placing an order of a printed circuit board P30099P00, provide us the software version No. shown on the indication panel (under the input terminal block) at the rear of the welding power source.

10.2 Reference Drawing

This section contains the schematic diagram and the parts layout drawing of the welding power source.

10.2.1 Schematic diagram

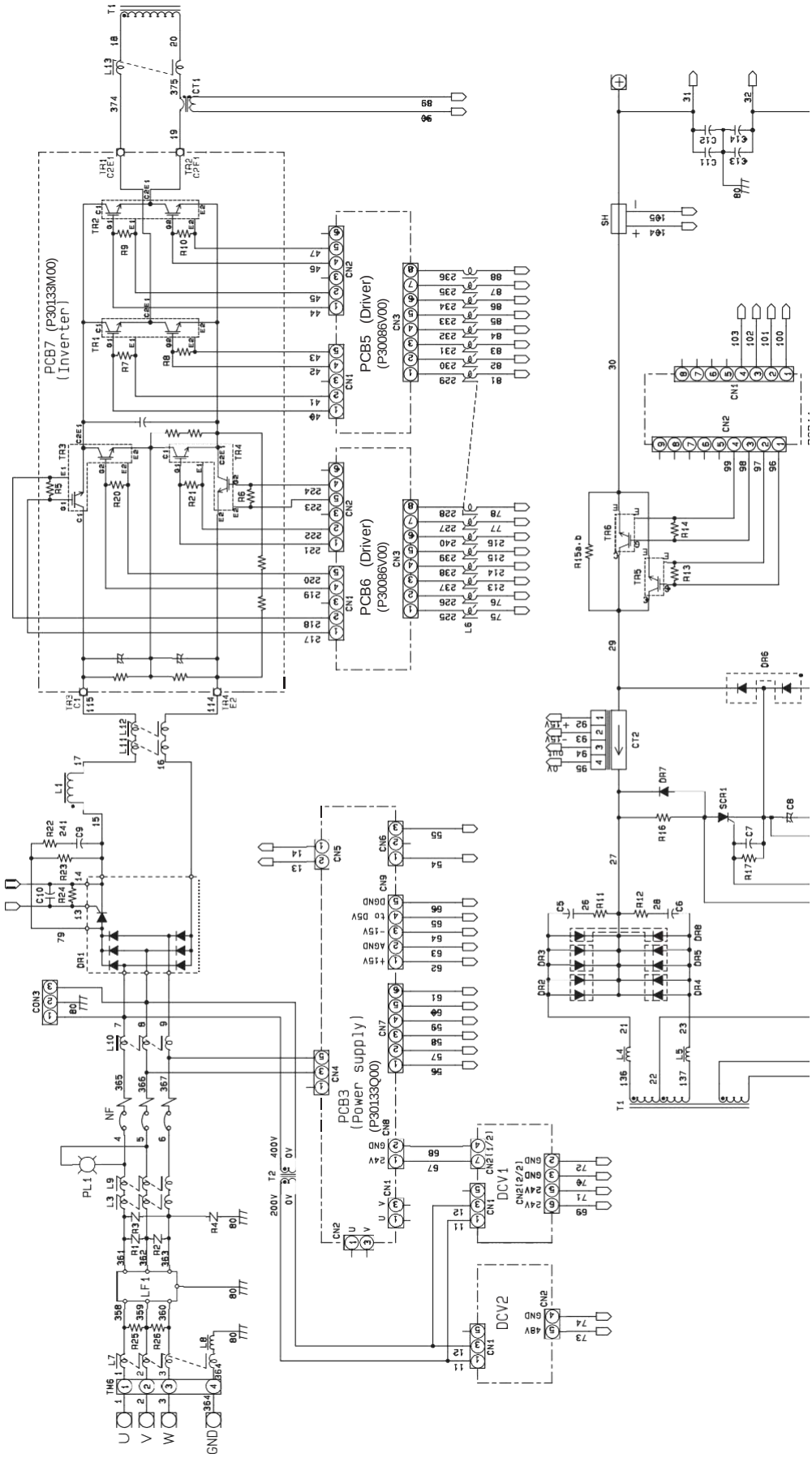

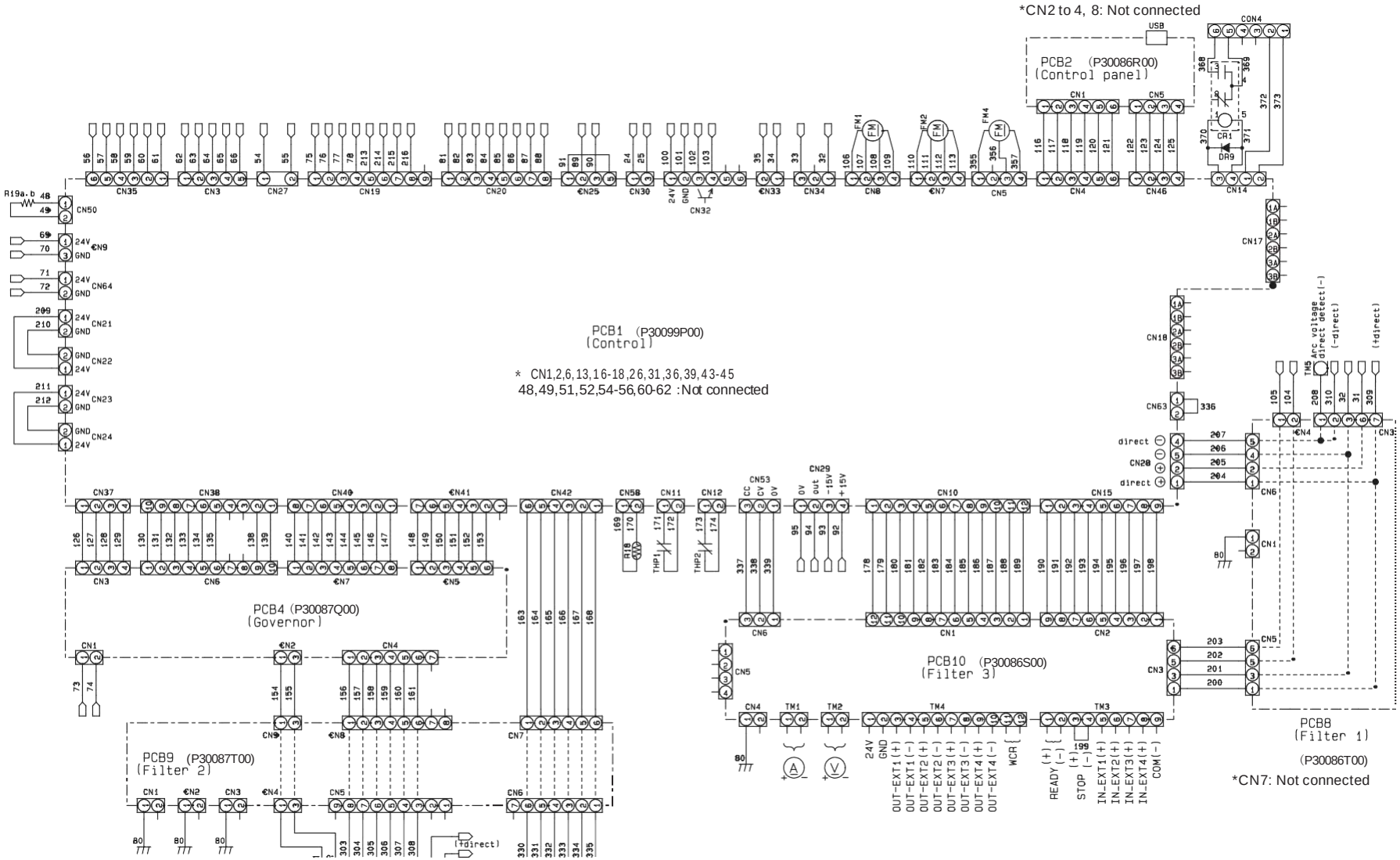
*CN2 to 4, 8: Not connected
PCB2 (P30086R00)
(Control panel)
PCB1 (P30099P00)
(Control)
* CN1,2,6,13,16-18,26,31,36,39,43-45
48,49,51,52,54-56,60-62 :Not connected
PCB4 (P30087Q00)
(Governor)
PCB9 (P30087T00)
(Filter 2)
PCB10 (P30086S00)
(Filter 3)
PCB8
(Filter 1)
(P30086T00)
*CN7: Not connected

10.2.2 Parts layout drawing

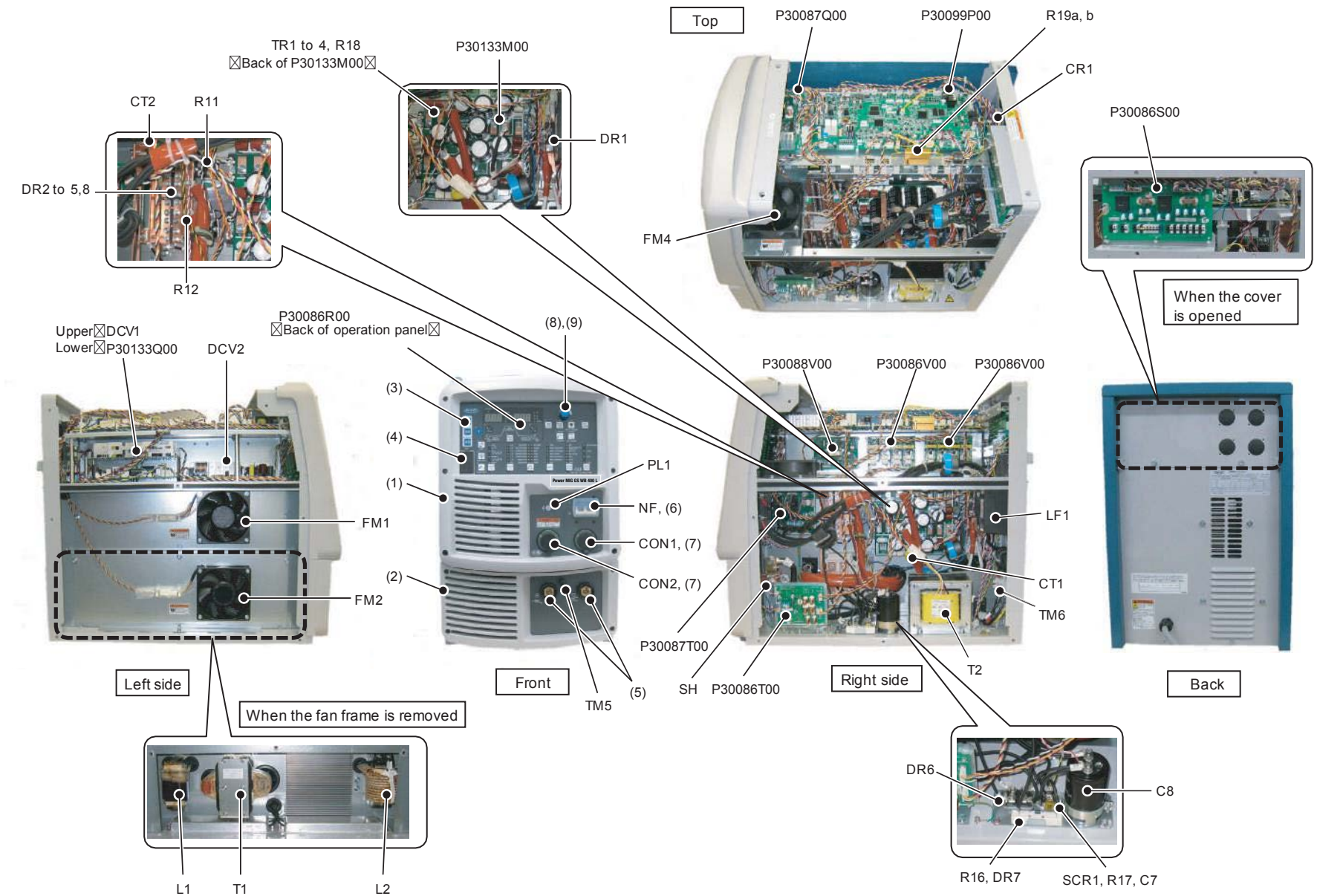

10.3 Materials for Setting Welding Conditions

This section provides reference information for setting the welding conditions.

10.3.1 Guide for changing welding conditions

This section gives examples of the problems that can occur due to improper welding conditions.

Problem	Symptom
The wire feeding length is too long.	• The arc length becomes long. • The bead width becomes wide. • Shielding becomes poor.
The wire feeding length is too short.	• The arc length becomes short. • Spatter is generated.
The welding voltage is too high.	• The arc length becomes long. • The bead width becomes wide. • Penetration and bead become small.
The welding voltage is too low.	• The wire contacts the base metal and spatter is generated. • The bead width becomes narrow.
The welding current is too high.	• The bead width becomes wide. • Penetration and bead become large.
The travel speed is too high.	• The bead width becomes narrow. • Penetration and bead become small.

10.3.2 Samples of welding condition settings

This section provides samples of common welding condition settings.
The values are for reference purpose. Adjust them according to the shape of actual weld zone and position of welding.

10.3.2.1 Example of CO_2 welding conditions

Example of welding conditions of horizontal fillet

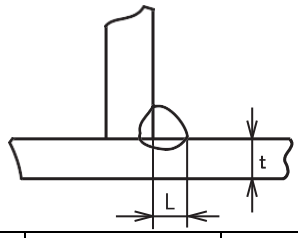

Plate thickness t(mm)	Leg length L (mm)	Wire diameter (mmΦ)	Current (A)	Voltage (V)	Travel speed (cm/min)	CO_2 gas flow rate (L/min)
1.2	2.5 to 3.0	0.9, 1.0	70 to 100	18 to 19	50 to 60	10 to 15
1.6	2.5 to 3.0	0.9 to 1.2	90 to 120	18 to 20	50 to 60	10 to 15
2.0	3.0 to 3.5	0.9 to 1.2	100 to 130	19 to 20	50 to 60	15 to 20
2.3	3.0 to 3.5	0.9 to 1.2	120 to 140	19 to 21	50 to 60	15 to 20
3.2	3.0 to 4.0	0.9 to 1.2	130 to 170	19 to 21	45 to 55	15 to 20
4.5	4.0 to 4.5	1.2	190 to 230	22 to 24	45 to 55	15 to 20

Plate thickness t(mm)	Leg length L (mm)	Wire diameter (mmΦ)	Current (A)	Voltage (V)	Travel speed (cm/min)	CO_2 gas flow rate (L/min)
6.0	5.0 to 6.0	1.2	250 to 280	26 to 29	40 to 50	15 to 20
9.0	6.0 to 7.0	1.2	280 to 300	29 to 32	35 to 40	15 to 20
12.0	7.0 to 8.0	1.2	300 to 340	32 to 34	30 to 35	20 to 25

Example for welding conditions of downward fillet

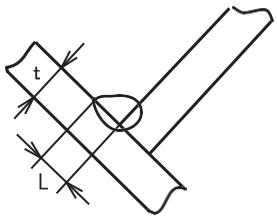

Plate thickness t(mm)	Leg length L (mm)	Wire diameter (mmΦ)	Current (A)	Voltage (V)	Travel speed (cm/min)	CO_2 gas flow rate (L/min)
1.2	2.5 to 3.0	0.9, 1.0	70 to 100	18 to 19	50 to 60	10 to 15
1.6	2.5 to 3.0	0.9 to 1.2	90 to 120	18 to 20	50 to 60	10 to 15
2.0	3.0 to 3.5	0.9 to 1.2	100 to 130	19 to 20	50 to 60	15 to 20
2.3	3.0 to 3.5	0.9 to 1.2	120 to 140	19 to 21	50 to 60	15 to 20
3.2	3.0 to 4.0	0.9 to 1.2	130 to 170	20 to 22	45 to 55	15 to 20
4.5	4.0 to 4.5	1.2	200 to 250	23 to 26	45 to 55	15 to 20
6.0	5.0 to 6.0	1.2	280 to 300	29 to 32	40 to 50	15 to 20
9.0	6.0 to 8.0	1.2	300 to 350	32 to 34	40 to 45	15 to 20
12.0	10.0 to 12.0	1.2	320 to 350	33 to 36	25 to 35	20 to 25

Example for welding conditions of I shape butt (without backing plate)

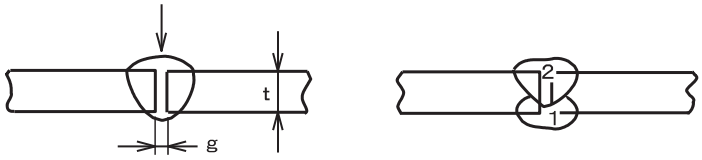

Plate thickness t(mm)	Root opening g(mm)	Wire diameter (mmΦ)	Current (A)	Voltage (V)	Travel speed (cm/min)	CO_2 gas flow rate (L/min)	Number of layers
1.2	0	0.9, 1.0	70 to 80	17 to 18	45 to 55	10	1
1.6	0	0.9, 1.0	80 to 100	18 to 19	45 to 55	10 to 15	1
2.0	0 to 0.5	0.9, 1.0	100 to 110	19 to 20	50 to 55	10 to 15	1
2.3	0.5 to 1.0	0.9 to 1.2	110 to 130	19 to 20	50 to 55	10 to 15	1
3.2	1.0 to 1.2	0.9 to 1.2	130 to 150	19 to 21	40 to 50	10 to 15	1
4.5	1.2 to 1.5	1.2	150 to 170	21 to 23	40 to 50	10 to 15	1
6.0	1.2 to 1.5	1.2	220 to 260	24 to 26	40 to 50	15 to 20	Front:1 Back:1 — 2
9.0	1.2 to 1.5	1.2	320 to 340	32 to 34	45 to 55	15 to 20	Front:1 Back:1 — 2

Example for welding conditions of single and double grooves

Plate thickness t(mm)	Bevel shape	Root opening g(mm)	Root face h(mm)	Wire diameter (mmΦ)	Current (A)	Voltage (V)	Travel speed (cm/min)	CO_2 gas flow rate (L/min)	Number of layers		
12	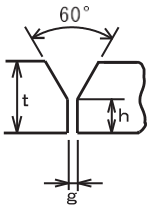	0 to 0.5	4 to 6	1.2	300 to 350	32 to 35	30 to 40	20 to 25	Front		2
					300 to 350	32 to 35	45 to 50	20 to 25	Back		
				1.6	380 to 420	36 to 39	35 to 40	20 to 25	Front		
					380 to 420	36 to 39	45 to 50	20 to 25	Back		
16		0 to 0.5	4 to 6	1.2	300 to 350	32 to 35	25 to 30	20 to 25	Front		2
					300 to 350	32 to 35	30 to 35	20 to 25	Back		
				1.6	380 to 420	36 to 39	30 to 35	20 to 25	Front		
					380 to 420	36 to 39	35 to 40	20 to 25	Back		
16	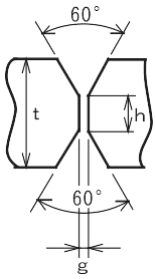	0	4 to 6	1.2	300 to 350	32 to 35	30 to 35	20 to 25	Front		2
					300 to 350	32 to 35	30 to 35	20 to 25	Back		
				1.6	380 to 420	36 to 39	35 to 40	20 to 25	Front		
					380 to 420	36 to 39	35 to 40	20 to 25	Back		
19		0	5 to 7	1.6	400 to 450	36 to 42	25 to 30	20 to 25	Front		2
					400 to 450	36 to 42	25 to 30	20 to 25	Back		
				1.6	400 to 420	36 to 39	45 to 50	20 to 25	1	Front/ Back	4
					400 to 420	36 to 39	35 to 40	20 to 25	2		
25		0	5 to 7	1.6	400 to 420	36 to 39	40 to 45	20 to 25	1	Front/ Back	4
					420 to 450	39 to 42	30 to 35	20 to 25	2		

Example for welding conditions of lap fillet

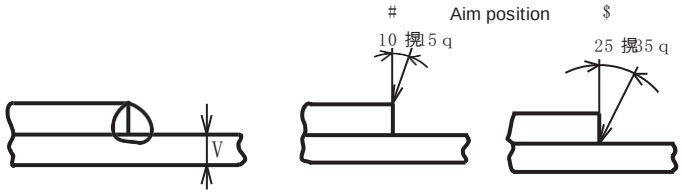

Plate thickness t(mm)	Wire diameter (mmΦ)	Current (A)	Voltage (V)	Travel speed (cm/min)	Aim position	CO_2 gas flow rate (L/min)
1.2	0.8 to 1.0	80 to 100	18 to 19	45 to 55	A	10 to 15
1.6	0.8 to 1.2	100 to 120	18 to 20	45 to 55	A	10 to 15
2.0	1.0 to 1.2	100 to 130	18 to 20	45 to 55	A or B	15 to 20
2.3	1.0 to 1.2	120 to 140	19 to 21	45 to 50	B	15 to 20
3.2	1.0 to 1.2	130 to 160	19 to 22	45 to 50	B	15 to 20
4.5	1.2	150 to 200	21 to 24	40 to 45	B	15 to 20

10.3.2.2 Example for welding conditions of wire CO_2 with flux

Example for welding conditions of horizontal fillet

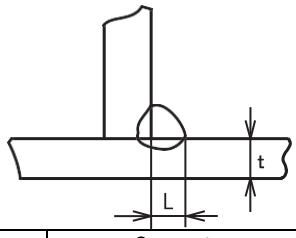

Leg length L(mm)	Wire diameter (mmΦ)	Current (A)	Voltage (V)	Travel speed (cm/min)
4	1.2	250	27	50
	1.4	330	29	100
	1.6	350	31	105
5	1.2	270	29	50
	1.4	330	30	90
	1.6	370	33	90
6	1.2	270	29	45
	1.4	330	31	80
	1.6	380	34	80
7	1.2	280	30	40
	1.4	350	32	50
	1.6	380	34	65
8	1.2	300	31	30
	1.4	350	33	45
	1.6	380	34	52
9	1.2	320	32	30
	1.4	350	34	40
	1.6	380	34	40

10.3.2.3 Example of MAG short arc welding

Material: Mild steel
Gas: Ar + CO_2 mixed gas (10 to 15 L/min)

Joint shape	Plate thickness t(mm)	Wire diameter (mmΦ)	Gap (mm)	Current (A)	Voltage (V)	Travel speed (cm/min)
Butt joint	1.0	0.8 to 1.0	0	50 to 55	13 to 15	40 to 55
	1.2	0.8 to 1.0	0	60 to 70	14 to 16	30 to 50
	1.6	0.8 to 1.0	0	100 to 110	16 to 17	40 to 60
	2.3	0.9 to 1.2	0 to 1.0	110 to 120	17 to 18	30 to 40
	3.2	0.9 to 1.2	1.0 to 1.5	120 to 140	17 to 19	25 to 30
	4.0	0.9 to 1.2	1.5 to 2.0	150 to 170	18 to 21	25 to 40

10.3.2.4 Example for short welding conditions of aluminum MIG

Example for welding conditions of I shape butt

Plate thickness t(mm)	Wire diameter (mmΦ)	Current (A)	Voltage (V)	Travel speed (cm/min)	Wire feeding length (mm)	Gas flow rate (L/min)
3.0	1.2	120 to 140	20 to 22	60 to 80	15	20
4.0	1.2	150 to 170	22 to 24	60 to 80	15 to 18	20
6.0	1.6	180 to 210	23 to 25	40 to 60	17 to 20	20 to 25

Example for welding conditions of horizontal fillet

Plate thickness t(mm)	Wire diameter (mmΦ)	Current (A)	Voltage (V)	Travel speed (cm/min)	Wire feeding length (mm)	Gas flow rate (L/min)
3.0	1.2	140 to 160	21 to 22	60 to 70	15	15 to 20
4.0	1.2	150 to 170	22 to 24	50 to 60	15 to 18	15 to 20
6.0	1.6	200 to 230	24 to 26	50 to 65	17 to 20	20 to 25

PoWer MIG Series

GeKaMac®

Gedik Welding Inc.
Ankara Caddesi No: 306 Şeyhli 34906 Pendik - İstanbul / Turkey
P. +90 216 378 50 00 • **F.** +90 216 378 20 44
www.gedikwelding.com

PoWer MIG Series

GeKaMac®

Gedik Welding Inc.
Ankara Caddesi No: 306 Şeyhli 34906 Pendik - İstanbul / Turkey
P. +90 216 378 50 00 • **F.** +90 216 378 20 44
www.gedikwelding.com